BATH BOOK 2016

RECTANGULAR BATHS

DOUBLE ENDED BATHS

SHOWER BATHS

ACCESSIBLE BATHS

STEEL BATHS

CORNER BATH

FREESTANDING BATHS

BATH PANELS

BATH SCREENS

WASTES & FITTINGS

www.ideal-standard.co.uk

WORLD-CLASS
DESIGN,
GREAT BRITISH
MANUFACTURING.

INTRODUCING THE BATH BOOK 2016, OUR SHOWCASE OF INSPIRATION, CREATION, INSTALLATION AND – ULTIMATELY – RELAXATION.

It's packed full of fresh concepts from the UK's leading bathroom brand – inspiring installation specialists like you to excite your customers.

FROM TIMELESS AND TRADITIONAL TO MODERN AND SURPRISING.
Award-winning international designs and the best of British engineering combine to deliver quality products to enhance spaces of all shapes and sizes.

A COMMITMENT TO QUALITY AND A PASSION FOR INNOVATION SHAPED BY TWO CENTURIES OF CREATIVITY IN THE DESIGN AND MANUFACTURE OF AWARD-WINNING BATHROOMS.

25 YEAR GUARANTEE

25-YEAR GUARANTEE

Our confidence in the quality and reliability of Ideal Standard products enables us to guarantee all Idealcast, Idealform and Idealform Plus+ baths for 25 years from date of purchase. Porcelain enamelled steel baths are guaranteed for 30 years from date of purchase if they are 3.2mm baths, and 2 years if they are 1.8mm steel baths. Bath panels and bath shower screens are guaranteed for 5 years from date of purchase. The guarantee does not cover general wear and tear. Our guarantee is offered on all products that have been used in the manner for which they were intended, and does not apply to any products that have been misused or abused in any way. Products must be installed and cared for in line with our fixing instructions and local water byelaws. The guarantee covers products in domestic use by the consumer and not commercial or business use. In the unlikely event the product fails within the guarantee period, we offer a free replacement or replacement part (or nearest equivalent). Liability is limited to individual products and does not cover consequential loss or damage on installations. When your bathroom has been satisfactorily installed and is working well, please ensure you register your guarantee. The guarantee is transferable – it applies to the product not the purchaser provided the guarantee registration details are passed on to the new owner. You can register for guarantees on a bathroom bought on your behalf by a plumber or builder.

Applies to UK and Republic of Ireland only. This guarantee does not affect your statutory rights.

Ideal STANDARD

IDEAL STANDARD IS ONE OF THE UK'S LEADING PRODUCERS OF QUALITY BATHS.

Expert engineers at our state-of-the-art production facility manufacture products based on concepts created by European designers recognised as pioneers of bathroom style and innovation.

From standard rectangular baths to those that save space or water, dual-purpose and double ended baths for bathing, showering and sharing, to luxury corner styles – our products come in all shapes, sizes and materials.

Customers can take comfort from a 25-year guarantee and aftercare services that complement the quality of our products.

Armitage Shanks

ARMITAGE SHANKS HAS LONG BEEN SYNONYMOUS WITH QUALITY, RELIABILITY, STYLE AND SERVICE.

Our rich heritage, spanning almost 200 years of manufacturing expertise and industry experience, has empowered us with insight into what it takes to create the perfect bathroom.

TECHNICAL SUPPORT
0870 129 6085

EMAIL ENQUIRIES
customercare@idealstandard.com

SOAK UP THE BEST OF BRITISH.

IDEAL STANDARD IS BUILT ON STRONG FOUNDATIONS

MADE IN BRITAIN, BUILT TO LAST.

Highly skilled workforce using the highest quality materials have forged our reputation as a producer of bathroom products that go beyond recognised European Standards. Engineered and manufactured in Hull, our products combine the great British qualities of style, strength and reliability.

3D MODELLING

We draw on modern technology and great British craftsmanship to create timeless products. This is where the creative process begins, with 3D software bringing to life our designers' concepts. Model-making teams use advanced automated machines to create and cut quality precision moulds.

GRP SPRAYING

Our baths are sprayed with glass reinforced plastic, the longer fibreglass strands create a better bond for a strong, long lasting layer of protection, as well as heat retention properties and rigidity.

ACRYLIC MOULDING

Using precision manufacturing processes, machine-fed acrylic sheets are heated to create flexibility and vacuum formed into shape using high tech equipment.

FINISHING

Choose from a selection of pre-drilled baths delivering an easy installation process, or undrilled pieces providing a greater variety of fitting options.

CUSTOMERS CAN SELECT PRODUCTS MANUFACTURED FROM A CHOICE OF MATERIALS, EACH WITH ITS OWN QUALITIES.

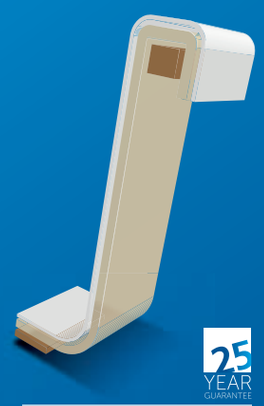

IDEALFORM

Moulded from a high-quality reinforced cell cast acrylic sheet. Scratch resistant, lightweight and long lasting

IDEALFORM PLUS+

All the properties of Idealform with additional reinforcement for exceptional strength and rigidity.

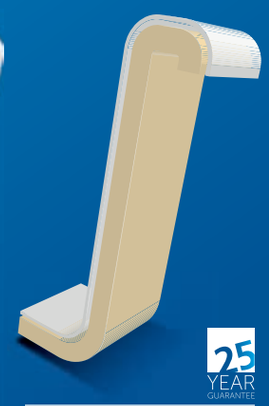

IDEALCAST

Idealcast is a composite of resins and minerals, producing a solid bath material that is comparable with the strength of cast iron, with half the weight.

STEEL

Porcelain enamelled steel baths offer strength and resilience. We offer 1.8mm and 3.2mm steel baths.

100% EXTRA REINFORCEMENT

IDEALFORM PLUS+
DECEPTIVELY STRONG, AMAZINGLY RIGID.

25 YEAR GUARANTEE

All the properties of Idealform with additional reinforcement for exceptional strength and rigidity.

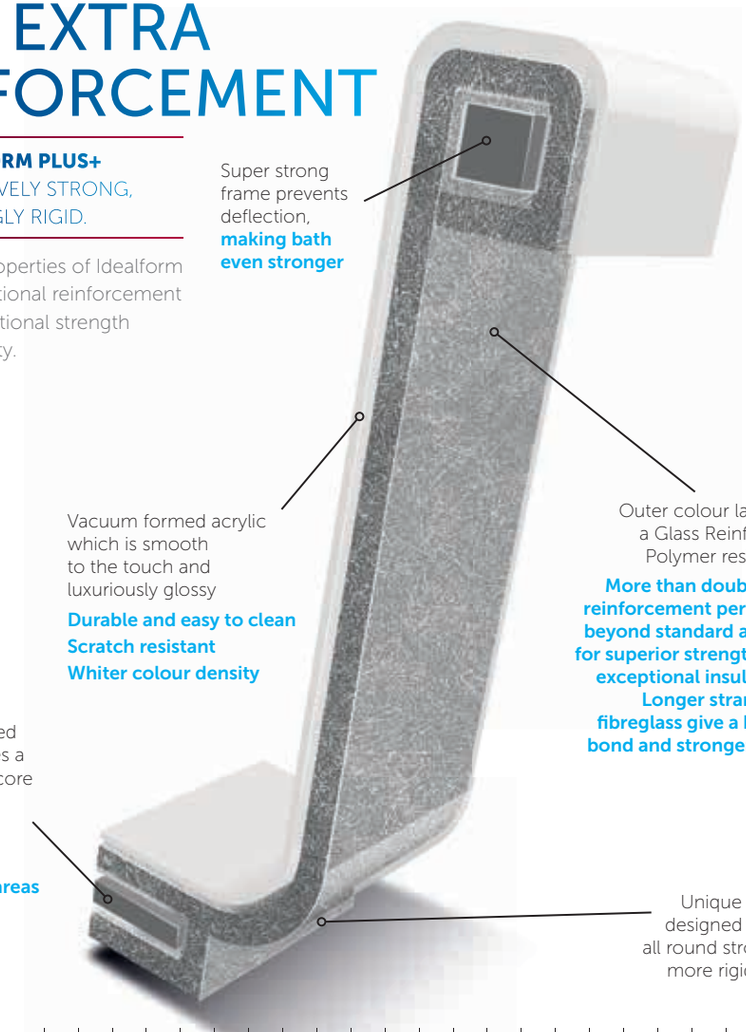

Super strong frame prevents deflection, **making bath even stronger**

Vacuum formed acrylic which is smooth to the touch and luxuriously glossy

Durable and easy to clean
Scratch resistant
Whiter colour density

Outer colour layer of a Glass Reinforced Polymer resin mix

More than double the reinforcement performs beyond standard acrylic for superior strength and exceptional insulation. Longer strands of fibreglass give a better bond and stronger bath

18mm encapsulated baseboard provides a supremely sturdy core

Ultimate rigidity
No creaking
Solid base
Reinforced in all areas

Unique legset designed for an all round stronger, more rigid bath

	Admiral	Alto	Alto CT	Ascot	Concept	Concept Air	Concept Freedom	Create	Jasper Morrison	Marina	Nisa	Plaza	Roll Top	Sandringham 21	Showertub	Simplicity	Space	Studio	Tempo Arc	Tempo Cube	Tesi	White
Idealform		•	•	•	•	•		•	•			•		•	•		•	•	•	•	•	
Idealform Plus+	•	•	•		•	•	•			•							•		•	•	•	
Steel											•			•		•						
Idealcast								•					•									•

WATER SAVING

IDEAL STANDARD IS AT THE FOREFRONT OF WATER SAVING INNOVATION, DEVELOPING LOW CAPACITY BATHS WHICH STILL OFFER LUXURIOUS BATHING WHILST USING 15-28% LESS WATER.

TECHNOLOGICAL INNOVATION

These innovative baths save water by design, either by a lowered overflow, or by optimising the internal shape of the bath whilst maintaining a comfortable bathing depth.

Look out for the water saving symbol throughout the book.

EUROPEAN WATER LABEL SCHEME

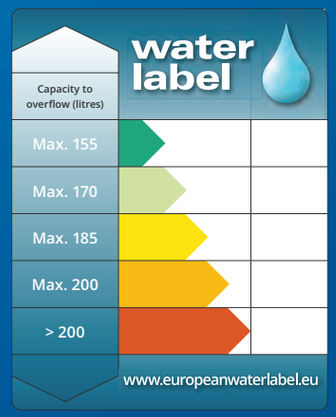

The Water Label is a scheme pioneered by bathroom product manufacturers and adopted across Europe in 2012 to highlight the water consumption of various products at a glance. Taps, showers, WCs and baths bearing the Water Label are now available in 34 countries.

Our product listing shows the Water Label in the form of a single line graphic as shown below:

SPACE SAVING

Smaller spaces no longer need to be a challenge; we have a number of space saving solutions to help you create beautiful bathrooms no matter what the size.

Look out for the space saving Baths in the Concept and Space ranges.

Ideal FAST PART
DELIVERING VALUE DIRECT

SPARE PARTS FAST!

FAST – DELIVERED DIRECT TO YOU IN 2-3 WORKING DAYS

CONVENIENT – ORDER ON THE GO FROM YOUR MOBILE

25% DISCOUNT AND **FREE DELIVERY** ON ALL FASTPART SPARES IF YOU REGISTER WITH IDEALPRO
www.idealpro.co.uk

HANDY INSTRUCTION VIDEOS AND **HOW-TO GUIDES** FOR INSTALLING REPLACEMENT SPARES AND FULL PRODUCTS

ALL SPARES COME WITH A **ONE YEAR GUARANTEE**

www.fastpart-spares.co.uk

SYMBOLS & GLOSSARY.

IF

IDEALFORM

Made from high quality reinforced cellcast acrylic and reinforced with Glass Reinforced Polymer, Idealform baths are long lasting, scratch and stain resistant, they are also easy to move and install.

IFP+

IDEALFORM PLUS+

Double the strength of standard baths, Idealform Plus+ combines four different layers of high quality materials to create a bath of exceptional strength and rigidity.

IC

IDEALCAST

A bath made of composite resins and minerals, giving the strength of cast iron with half the weight.

ST

STEEL

Standard gauge porcelain enamelled steel baths offer superior strength and resilience and are the ideal choice when durability is essential.

WS

WATER SAVING

Water saving baths offer the same luxurious bathing experience with less water.

HG

HAND GRIPS

Provides extra support and safety when stepping in or out of the bath.

AS

ANTI-SLIP

Built-in anti-slip* feature delivers added peace of mind.

*Anti-slip reduces the likelihood of slipping but does not prevent all slipping.

A BEAUTIFUL USE OF SPACE

CONTENTS

RECTANGULAR BATHS 19

DOUBLE ENDED BATHS 47

SHOWER BATHS 57

ACCESSIBLE BATHS 72

STEEL BATHS 75

CORNER BATH 85

FREESTANDING BATHS 87

BATH PANELS 91

BATH SCREENS 95

WASTES & FITTINGS 111

RECTANGULAR BATHS

A popular choice due to a range of styles, sizes and ease of installation, rectangular baths offer the versatility of bathing or showering over the bath, and are perfect for smaller bathrooms and awkward shaped spaces.

Alto CT

150x70cm
Rectangular Bath

IDEALFORM
IDEALFORM PLUS+
HANDGRIPS

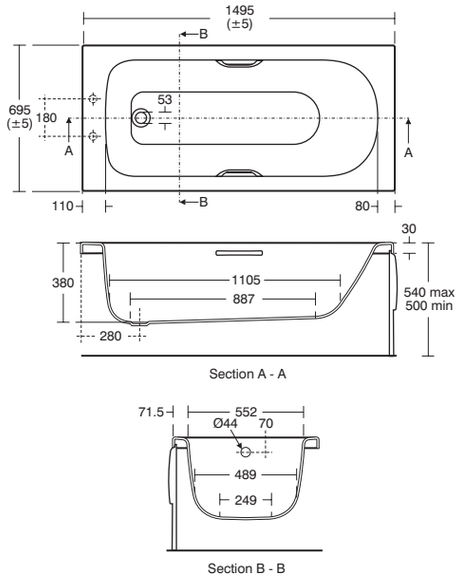

Alto CT 150x70cm Rectangular Bath

Ref	Model	Price
E761801	Two tapholes – with grips	£204.30
E761901	Two tapholes	£185.59
E762001	No tapholes	£185.59

water label 149 Litres

Alto CT 150x70cm Idealform Plus+ Rectangular Bath

Ref	Model	Price
E762201	No tapholes – with grips	£351.02
E762401	No tapholes	£332.30

water label 149 Litres

Panels

Ref	Model	Price
E762101	Standard 150cm front bath panel	£39.61
E423001	Standard 70cm end bath panel	£30.10

Panels for Idealform Plus+

Ref	Model	Price
E479601	Unilux Plus+ 150cm front bath panel	£119.35
E483101	Unilux Plus+ 70cm end bath panel	£59.66

Retail price inc. VAT

Sandringham 21

150x70cm
Rectangular Bath

IDEALFORM
HANDGRIPS

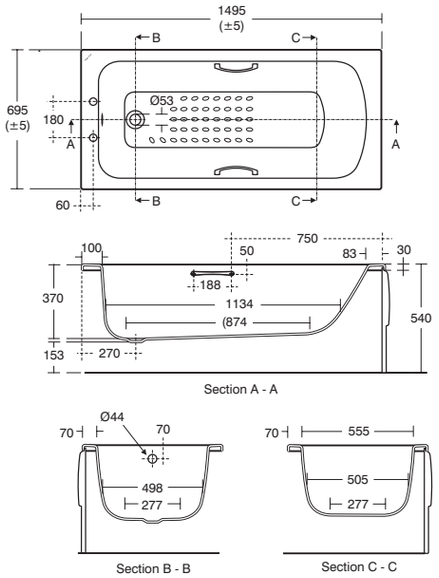

Sandringham 21 150x70cm Rectangular Bath

Ref	Model	Price
E028601	Two tapholes – with chrome plated grips and tread pattern	£200.72

water label 148 Litres

Panels

Ref	Model	Price
S101701	Sandringham 21 150cm front bath panel	£33.68
S102001	Sandringham 21 70cm end bath panel	£18.25

Retail price inc. VAT

Concept

150x70cm
Rectangular Bath

IDEALFORM | IDEALFORM PLUS+

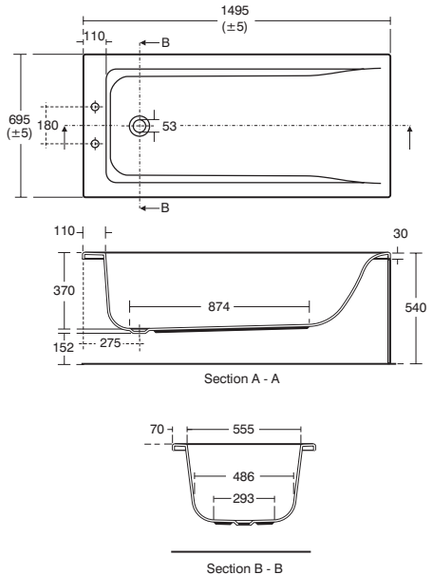

Concept 150x70cm Rectangular Bath

Ref	Model	Price
E729701	Two tapholes	£322.21
E735601	No tapholes	£322.21

water label 149 Litres

Concept 150x70cm Idealform Plus+ Rectangular Bath

Ref	Model	Price
E861401	No tapholes	£404.90

water label 149 Litres

Panels

Ref	Model	Price
E479601	Unilux Plus+ 150cm front bath panel	£119.35
E483101	Unilux Plus+ 70cm end bath panel	£59.66

Retail price inc. VAT

IDEALFORM PLUS+
DECEPTIVELY STRONG, AMAZINGLY RIGID.

- More than double the reinforcement and strength
- Exceptional insulation
- No creaking

KR	KS	SO	SX	WG
Gloss Grey	Elm	American Oak	Dark Walnut	Gloss White

UNILUX FURNITURE FINISH PANELS

Unilux 150cm front bath panel for standard height baths

Ref	Model	Price
E6499SO	American Oak	£254.59
E6499SX	Dark Walnut	£254.59
E6499WG	Gloss White	£254.59
E6499KR	Gloss Grey	£282.88
E6499KS	Elm	£254.59

Unilux 70cm end panel for standard height baths

Ref	Model	Price
E6502SO	American Oak	£133.68
E6502SX	Dark Walnut	£133.68
E6502WG	Gloss White	£133.68
E6502KR	Gloss Grey	£148.52
E6502KS	Elm	£133.68

Retail price inc. VAT

Rectangular Bath | 150x70cm

Sandringham 21

160x70cm
Rectangular Bath

IDEALFORM HANDGRIPS

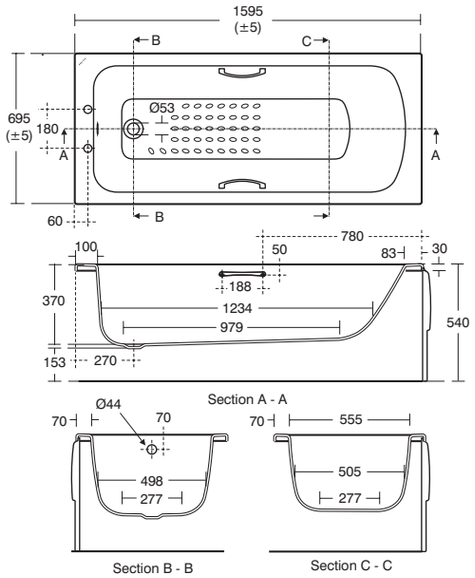

Sandringham 21 160x70cm Rectangular Bath

Ref	Model	Price
E028701	Two tapholes – with chrome plated grips and tread pattern	£196.49
E027701	Two tapholes – with chrome plated grips	£196.49
E027601	Two tapholes	£182.46

water label 160 Litres

Panels

Ref	Model	Price
S101801	Sandringham 21 160cm front bath panel	£33.68
S102001	Sandringham 21 70cm end bath panel	£18.25

Retail price inc. VAT

Tesi

160x70cm
Rectangular Bath

IDEALFORM IDEALFORM PLUS+

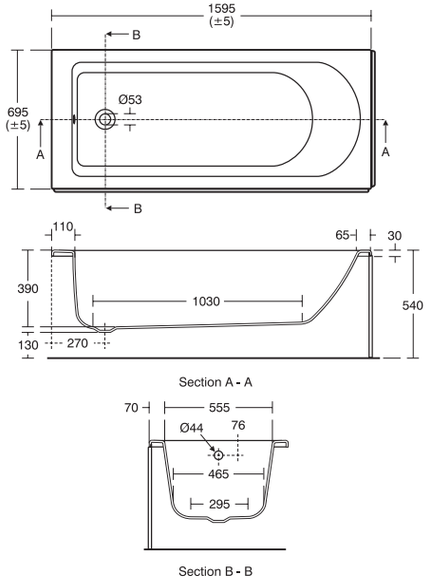

Tesi 160x70cm Rectangular Bath

Ref	Model	Price
T000101	No tapholes	£234.52

water label 163 Litres

Tesi 160x70cm Idealform Plus+ Rectangular Bath

Ref	Model	Price
T000301	No tapholes	£366.26

water label 163 Litres

Panels

Ref	Model	Price
E318301	Unilux 160cm front bath panel	£118.62
E316901	Unilux 70cm end bath panel	£59.66

Retail price inc. VAT

Sandringham 21

170x70cm
Rectangular Bath

Armitage Shanks

IF IDEALFORM

HG HANDGRIPS

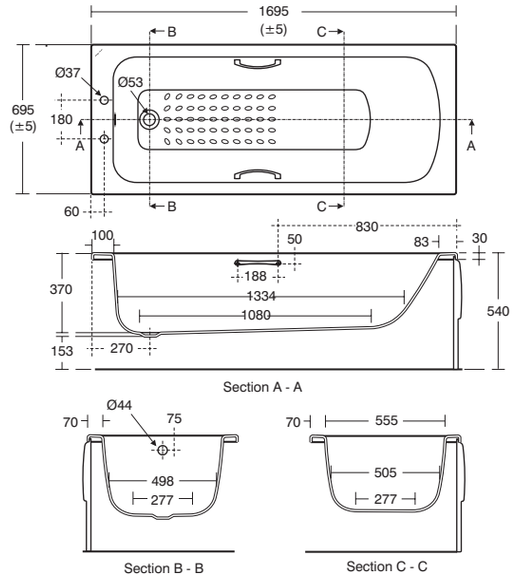

Sandringham 21 170x70cm Rectangular Bath

Ref	Model	Price
E028401	Two tapholes – with chrome plated grips and tread pattern	£196.49
E028301	Two tapholes – with chrome plated grips	£196.49
E028201	Two tapholes	£182.46

water label 174 Litres

Panels

Ref	Model	Price
S101901	Sandringham 21 170cm front bath panel	£33.68
S102001	Sandringham 21 70cm end bath panel	£18.25

ALSO AVAILABLE IN

STEEL 82

WATER SAVING 27

Retail price inc. VAT

Sandringham 21

170x70cm
Rectangular Water Saving Bath

Armitage Shanks

IF IDEALFORM

HG HANDGRIPS

WS WATER SAVING

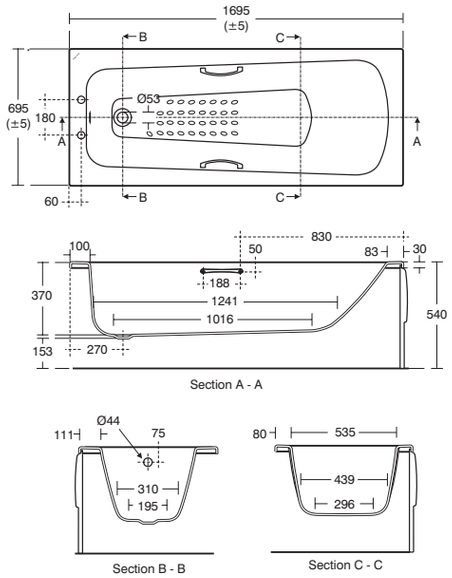

Sandringham 21 170x70cm Rectangular Water Saving Bath

Ref	Model	Price
E028801	Two tapholes – with chrome plated grips and tread pattern	£200.72

water label 139 Litres

Panels

Ref	Model	Price
S101901	Sandringham 21 170cm front panel	£33.68
S102001	Sandringham 21 70cm end panel	£18.25

Retail price inc. VAT

Tempo Arc

170x70cm
Rectangular Bath

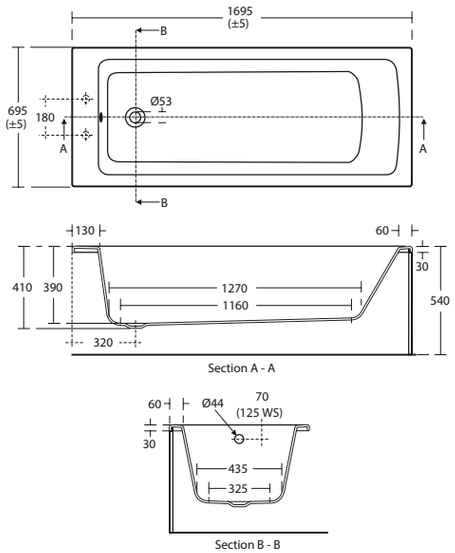

Tempo Arc 170x70cm Rectangular Bath

Ref	Model	Price
E256301	No tapholes	£211.39
E256401	Two tapholes	£211.39
		water label 181 Litres
E256501	Water saving bath – no tapholes	£211.39
		water label 139 Litres

Tempo Arc 170x70cm Idealform Plus+ Rectangular Bath

Ref	Model	Price
E257201	No tapholes	£341.87
		water label 181 Litres

Panels

Ref	Model	Price
E319401	Unilux 170cm front bath panel	£119.35
E316901	Unilux 70cm end bath panel	£59.66

Panels for Idealform Plus+

Ref	Model	Price
E479701	Unilux Plus+ 170cm front bath panel	£119.35
E483101	Unilux Plus+ 70cm end bath panel	£59.66

ALSO AVAILABLE IN

DOUBLE ENDED 49

Retail price inc. VAT

IF IDEALFORM

IFP+ IDEALFORM PLUS+

WS WATER SAVING

Tesi

170x70cm
Rectangular Bath

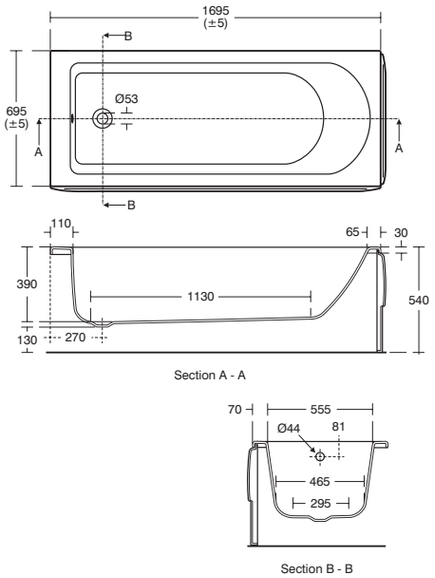

Tesi 170x70cm Rectangular Bath

Ref	Model	Price
T000501	No tapholes	£234.52
		water label 173 Litres

Tesi 170x70cm Rectangular Water Saving Bath

Ref	Model	Price
T000901	Water saving rectangular bath – no tapholes	£234.52
		water label 139 Litres

Tesi 170x70cm Idealform Plus+ Rectangular Bath

Ref	Model	Price
T000701	No tapholes	£366.26
		water label 173 Litres

Panels

Ref	Model	Price
E319401	Unilux 170cm front bath panel	£119.35
E316901	Unilux 70cm end bath panel	£59.66

Panels for Idealform Plus+

Ref	Model	Price
E479701	Unilux Plus+ 170cm front bath panel	£119.35
E483101	Unilux Plus+ 70cm end bath panel	£59.66

Retail price inc. VAT

IF IDEALFORM

IFP+ IDEALFORM PLUS+

WS WATER SAVING

Tempo Cube

170x70cm
Rectangular Bath

IDEALFORM IDEALFORM PLUS+ WATER SAVING

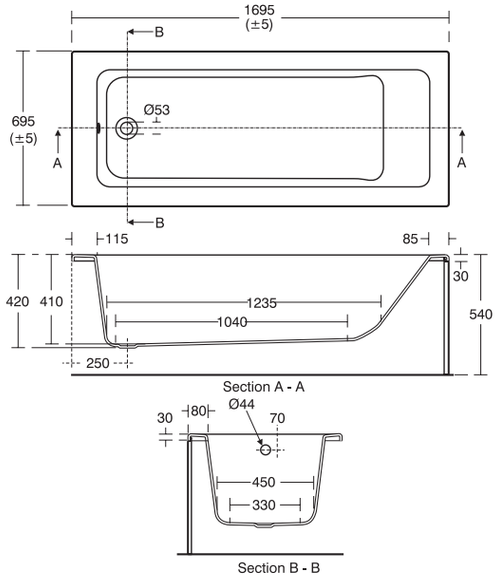

Tempo Cube 170x70cm Rectangular Bath

Ref	Model	Price
E258001	No tapholes	£254.45

water label 185 Litres

Tempo Cube 170x70cm Water Saving Bath

Ref	Model	Price
E258101	No tapholes	£254.45

water label 139 Litres

Tempo Cube 170x70cm Idealform Plus+ Rectangular Bath

Ref	Model	Price
E258501	No tapholes	£384.94

water label 185 Litres

Panels

Ref	Model	Price
E319401	Unilux 170cm front bath panel	£119.35
E316901	Unilux 70cm end bath panel	£59.66

Panels for Idealform Plus+

Ref	Model	Price
E479701	Unilux Plus+ 170cm front bath panel	£119.35
E483101	Unilux Plus+ 70cm end bath panel	£59.66

Retail price inc. VAT

Concept

170x70cm
Rectangular Bath

IDEALFORM IDEALFORM PLUS+

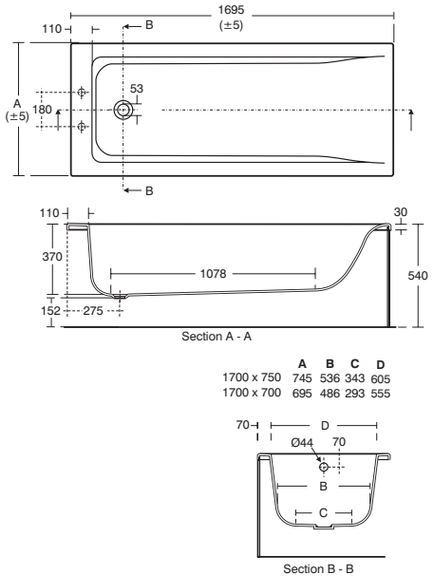

Concept 170x70cm Rectangular Bath

Ref	Model	Price
E729201	Two tapholes	£322.21
E735201	No tapholes	£322.21

water label 174 Litres

Concept 170x70cm Idealform Plus+ Rectangular Bath

Ref	Model	Price
E860001	No tapholes	£404.90

water label 174 Litres

Panels

Ref	Model	Price
E319401	Unilux 170cm front bath panel	£119.35
E316901	Unilux 70cm end bath panel	£59.66

Panels for Idealform Plus+

Ref	Model	Price
E479701	Unilux Plus+ 170cm front bath panel	£119.35
E483101	Unilux Plus+ 70cm end bath panel	£59.66

Retail price inc. VAT

Concept

170x70cm
Rectangular Bath with handgrips

IDEALFORM | IDEALFORM PLUS+ | HANDGRIPS

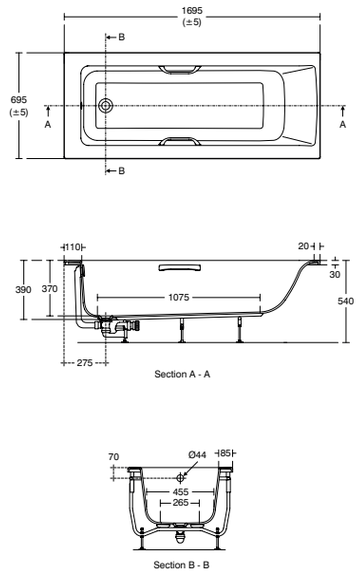

Concept 170x70cm Regtangular Bath with Handgrips

Ref	Model	Price
E113901	No tapholes	£434.70

water label 174 Litres

Concept 170x70cm Idealform Plus+ Regtangular Bath with Handgrips

Ref	Model	Price
E114101	No tapholes	£558.90

water label 174 Litres

Panels

Ref	Model	Price
E319401	Unilux 170cm front bath panel	£119.35
E316901	Unilux 70cm end bath panel	£59.66

Panels for Idealform Plus+

Ref	Model	Price
E479701	Unilux Plus+ 170cm front bath panel	£119.35
E483101	Unilux Plus+ 70cm end bath panel	£59.66

Retail price inc. VAT

Concept

170x70cm
Space Saving Bath

IDEALFORM | IDEALFORM PLUS+

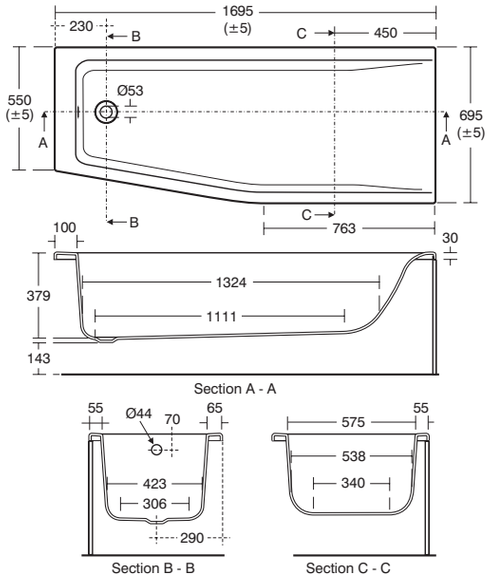

Concept 170x70cm Spacemaker Bath

Ref	Model	Price
E049801	No tapholes – right hand	£379.32
E049901	No tapholes – left hand	£379.32

water label 169 Litres

Concept 170x70cm Idealform Plus+ Spacemaker Bath

Ref	Model	Price
E861601	No tapholes – right hand	£474.16
E861801	No tapholes – left hand	£474.16

water label 169 Litres

Panels

Ref	Model	Price
E050101	Concept Spacemaker front bath panel	£135.76
E316901	Unilux 70cm end bath panel	£59.66

Retail price inc. VAT

Marina

170x70cm
Idealform Plus+ Rectangular Bath

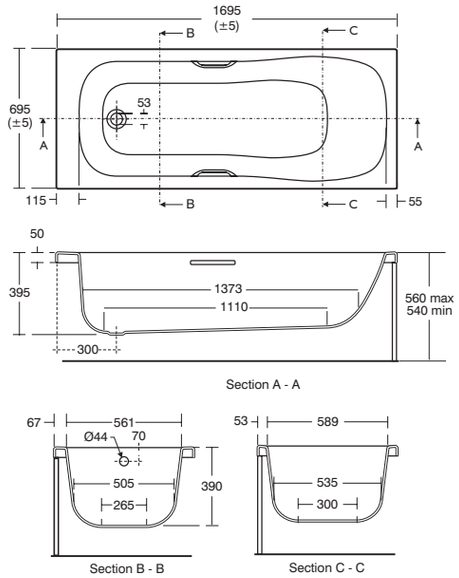

Marina 170x70cm Idealform Plus+ Rectangular Bath

Ref	Model	Price
E480801	No tapholes – with grips	£455.24

water label 197 Litres

Panels

Ref	Model	Price
E479701	Unilux Plus+ 170cm front bath panel	£119.35
E483101	Unilux Plus+ 70cm end bath panel	£59.66

Retail price inc. VAT

Admiral

167x69cm
Idealform Plus+ Rectangular Bath

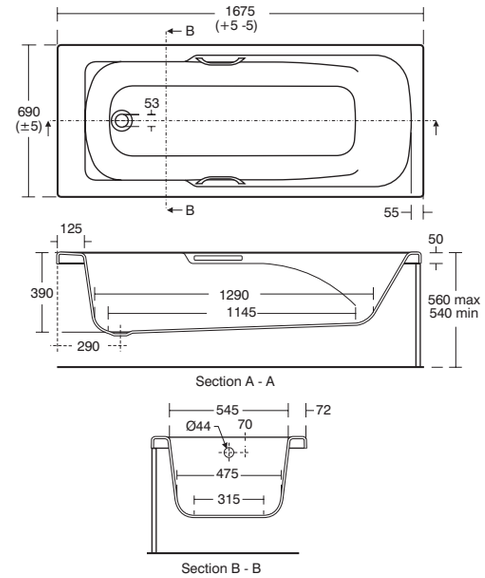

Admiral 167x69cm Idealform Plus+ Rectangular Bath

Ref	Model	Price
E478101	No tapholes – with grips	£469.94

water label 170 Litres

Panels

Ref	Model	Price
E483701	Admiral 167cm front bath panel	£125.63
E483801	Admiral 69cm end bath panel	£62.80

IDEALFORM PLUS+
DECEPTIVELY STRONG, AMAZINGLY RIGID.

- More than double the reinforcement and strength
- Exceptional insulation
- No creaking

Retail price inc. VAT

Alto

170x70cm
Rectangular Bath

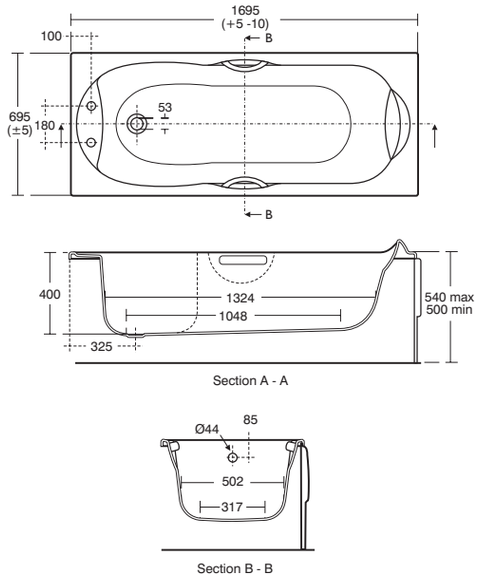

Alto 170x70cm Rectangular Bath

Ref	Model	Price
E769501	No tapholes – with chrome plated grips	£413.09
E769401	Two tapholes – with chrome plated grips	£413.09

water label 195 Litres

Alto 170x70cm Water Saving Bath

Ref	Model	Price
E769001	Two tapholes – with chrome plated grips	£413.09

water label 149 Litres

Panels

Ref	Model	Price
E413001	Uniline 170cm front bath panel	£119.75
E414001	Uniline 70cm end bath panel	£63.89

ALSO AVAILABLE IN

SHOWER BATH 61

Retail price inc. VAT

Alto CT

170x70cm
Rectangular Bath

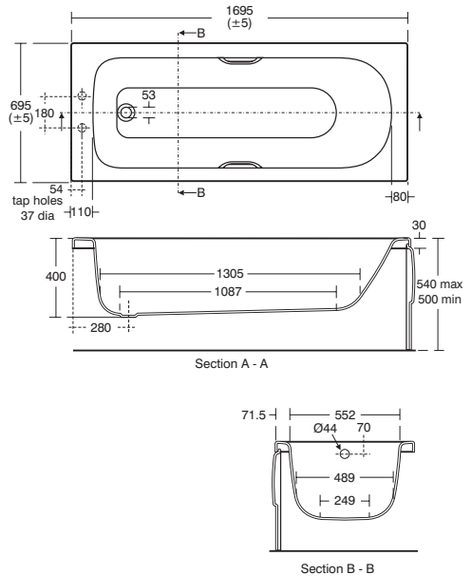

Alto CT 170x70cm Rectangular Bath

Ref	Model	Price
E763301	Two tapholes – with grips	£204.30
E763401	Two tapholes	£185.59
E763501	No tapholes	£185.59

Alto CT 170x70cm Idealform Plus+ Rectangular Bath

Ref	Model	Price
E762601	With grips – no tapholes	£351.02
E762801	No tapholes	£332.30

water label 180 Litres

Alto CT 170x70cm Water Saving Bath

E763201	Two tapholes – with grips, 149 litres	£204.30
E764201	Two tapholes – 140 litres	£204.30
E764301	No tapholes – 149 litres	£204.30

water label 140 Litres water label 149 Litres

Panels

Ref	Model	Price
E422001	Standard 170cm front bath panel	£39.61
E423001	Standard 70cm end bath panel	£30.10

Panels for Idealform Plus+

Ref	Model	Price
E479701	Unilux Plus+ 170cm front bath panel	£119.35
E483101	Unilux Plus+ 70cm end bath panel	£59.66

Retail price inc. VAT

Plaza

170x70cm
Rectangular Bath

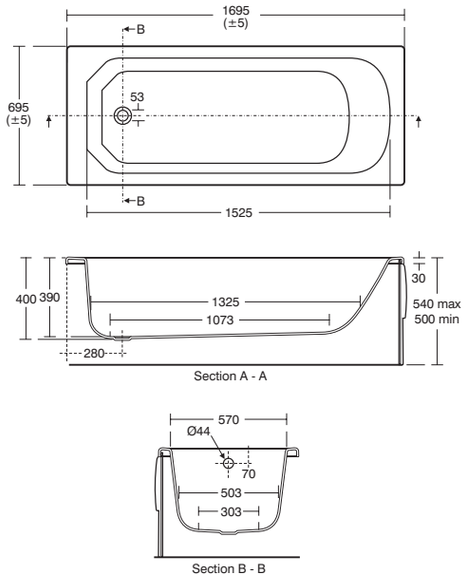

Plaza 170x70cm Rectangular Bath

Ref	Model	Price
E147801	No tapholes	£478.37

water label 170 Litres

Panels

Ref	Model	Price
E413001	Uniline 170cm front bath panel	£119.75
E414001	Uniline 70cm end bath panel	£63.89

Retail price inc. VAT

Create

170x70cm
Rectangular Bath

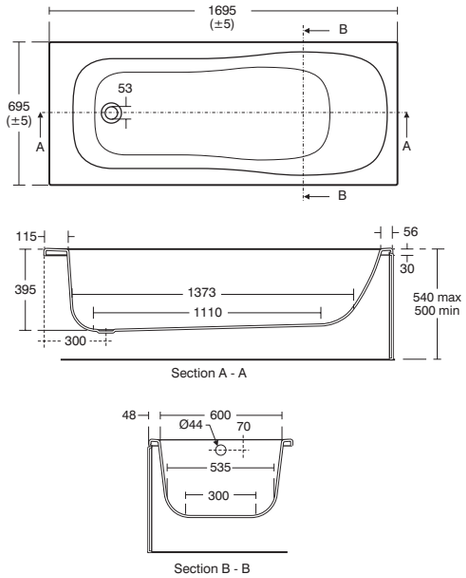

Create 170x70cm Rectangular Bath

Ref	Model	Price
E329401	No tapholes	£506.24

water label 190 Litres

Panels

Ref	Model	Price
E319401	Unilux 170cm front bath panel	£119.35
E316901	Unilux 70cm end bath panel	£59.66

Bath Screen

Ref	Model	Price
L9122AA	Create rectangular bath shower screen – clear glass	£427.61

ALSO AVAILABLE IN

SHOWER BATH 62

Retail price inc. VAT

Rectangular Bath | 170x70cm

Jasper Morrison

170x70cm
Rectangular Bath

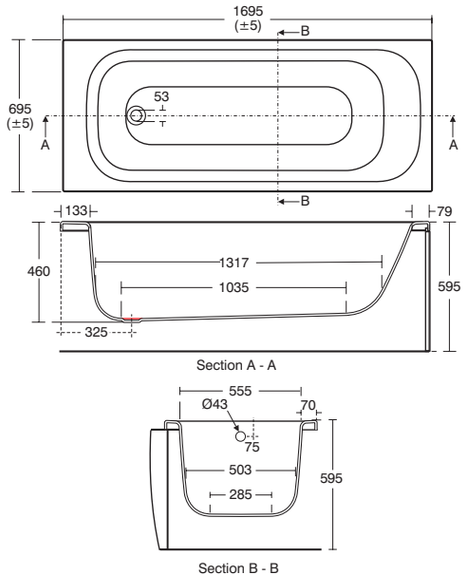

Jasper Morrison 170x70cm Rectangular Bath

Ref	Model	Price
E636501	No tapholes	£515.16

water label 230 Litres

Panels

Ref	Model	Price
E635501	Jasper Morrison 170cm front bath panel	£158.50
E636601	Jasper Morrison 70cm end bath panel	£69.36

Retail price inc. VAT

IDEALFORM

Rectangular Bath | 170x70cm

Studio

170x70cm
Rectangular Bath

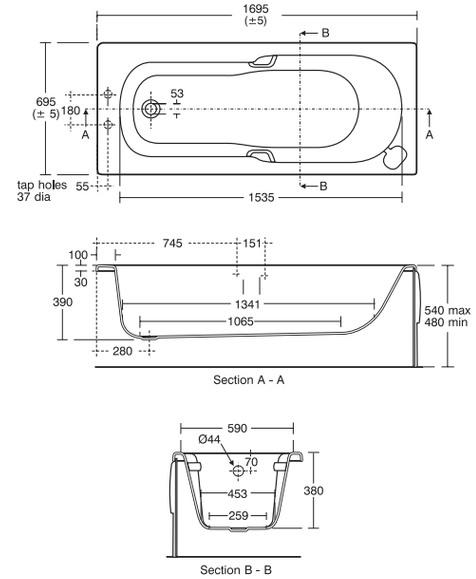

Studio 170x70cm Rectangular Bath

Ref	Model	Price
E410201	Two tapholes – with colour matched handgrips	£481.42

water label 185 Litres

Panels

Ref	Model	Price
E413001	Uniline 170cm front bath panel	£119.75
E414001	Uniline 70cm end bath panel	£63.89

Retail price inc. VAT

IDEALFORM HANDGRIPS

Rectangular Bath | 170x70cm

Concept

170x75cm
Rectangular Bath

IF IDEALFORM

IFP+ IDEALFORM PLUS+

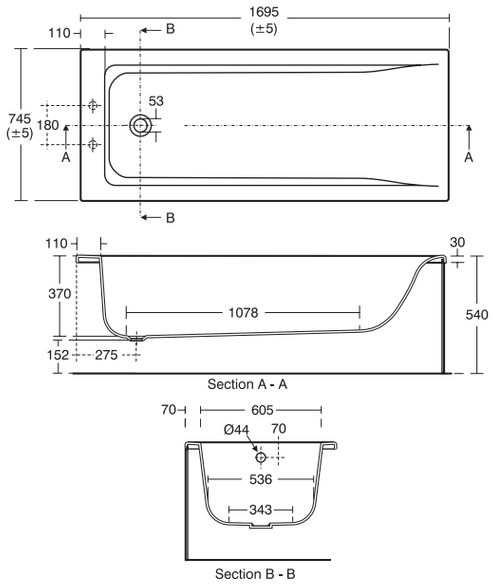

Concept 170x75cm Rectangular Bath

Ref	Model	Price
E729501	Two tapholes	£339.17
E735401	No tapholes	£339.17

water label 186 Litres

Concept 170x75cm Idealform Plus+ Rectangular Bath

Ref	Model	Price
E860201	No tapholes	£422.39

water label 186 Litres

Panels

Ref	Model	Price
E319401	Unilux 170cm front bath panel	£119.35
E319501	Unilux 75cm end bath panel	£63.94

Panels for Idealform Plus+

Ref	Model	Price
E479701	Unilux Plus+ 170cm front bath panel	£119.35
E483201	Unilux Plus+ 75cm end bath panel	£59.66

Retail price inc. VAT

IFP+

IDEALFORM PLUS+
DECEPTIVELY STRONG, AMAZINGLY RIGID.

- More than double the reinforcement and strength
- Exceptional insulation
- No creaking

KR	KS	SO	SX	WG
Gloss Grey	Elm	American Oak	Dark Walnut	Gloss White

Unilux 170cm front bath panel for standard height baths

Ref	Model	Price
E6500SO	American Oak	£254.59
E6500SX	Dark Walnut	£254.59
E6500WG	Gloss White	£254.59
E6500KR	Gloss Grey	£282.88
E6500KS	Elm	£254.59

Unilux 75cm end panel for standard height baths

Ref	Model	Price
E6501SO	American Oak	£146.40
E6501SX	Dark Walnut	£146.40
E6501WG	Gloss White	£146.40
E6501KR	Gloss Grey	£162.65
E6501KS	Elm	£146.40

ALSO AVAILABLE IN
DOUBLE ENDED 52
SHOWER BATH 63 & 64

Retail price inc. VAT

Rectangular Bath | 170x75cm

Tempo Cube

170x75cm
Rectangular Bath

IDEALFORM IDEALFORM PLUS+

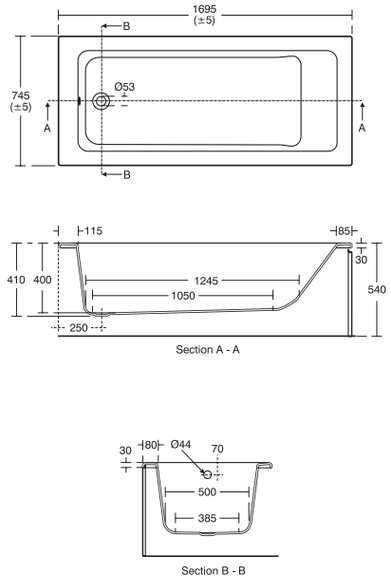

Tempo Cube 170x75cm Rectangular Bath

Ref	Model	Price
E258201	No tapholes	£267.49

water label 200 Litres

Tempo Cube 170x75cm Idealform Plus+ Rectangular Bath

Ref	Model	Price
E258701	No tapholes	£397.98

water label 200 Litres

Panels

Ref	Model	Price
E319401	Unilux 170cm front bath panel	£119.35
E319501	Unilux 75cm end bath panel	£63.94

Panels for Idealform Plus+

Ref	Model	Price
E479701	Unilux Plus+ 170cm front bath panel	£119.35
E483201	Unilux Plus+ 75cm end bath panel	£59.66

ALSO AVAILABLE IN

DOUBLE ENDED 50

Retail price inc. VAT

Alto

170x75cm
Rectangular Bath

IDEALFORM HANDGRIPS

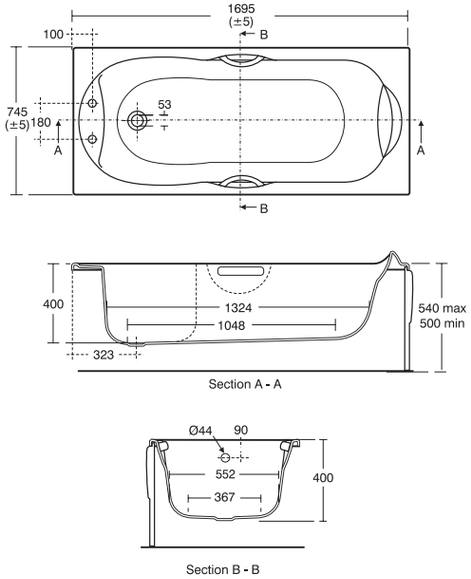

Alto 170x75cm Rectangular Bath

Ref	Model	Price
E768501	No tapholes – with chrome handgrips	£495.71

water label 210 Litres

Panels

Ref	Model	Price
E319401	Unilux 170cm front bath panel	£119.35
E319501	Unilux 75cm end bath panel	£63.94

ALSO AVAILABLE IN

DOUBLE ENDED 48

Retail price inc. VAT

Marina

180x70cm
Idealform Plus+ Rectangular Bath

IDEALFORM PLUS+ HANDGRIPS

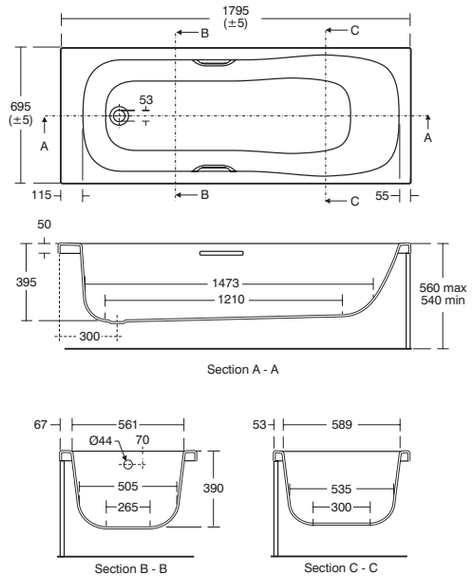

Marina 180x70cm Idealform Plus+ Rectangular Bath

Ref	Model	Price
E480901	No tapholes – with chrome plated grips	£634.10

water label 208 Litres

Panels

Ref	Model	Price
E479801	Unilux Plus+ 180cm front bath panel	£119.35
E483101	Unilux Plus+ 70cm end bath panel	£59.66

IDEALFORM PLUS+
DECEPTIVELY STRONG, AMAZINGLY RIGID.

- More than double the reinforcement and strength
- Exceptional insulation
- No creaking

Retail price inc. VAT

DOUBLE ENDED BATHS

A selection giving bathers room to relax – either on their own or with company. A variety of designs and sizes means smaller spaces can accommodate the luxury of a double ended bath.

Alto

170x75cm
Double Ended Bath

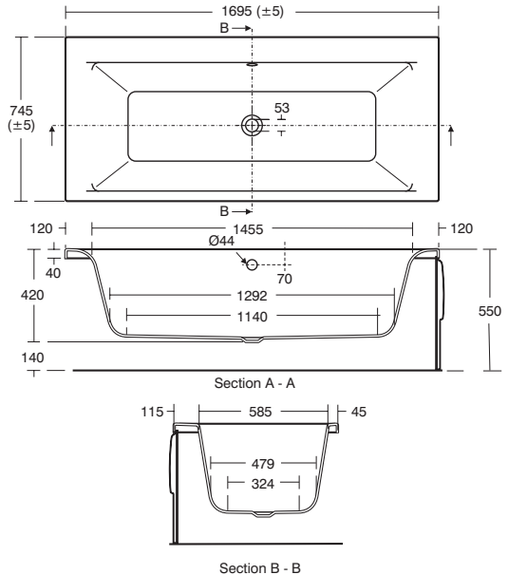

Alto 170x75cm Double Ended Bath

Ref	Model	Price
E763601	No tapholes	£204.14

water label 199 Litres

Alto 170x75cm Idealform Plus+ Double Ended Bath

Ref	Model	Price
E764801	No tapholes	£350.87

water label 199 Litres

Panels for Idealform Bath

Ref	Model	Price
E422001	Standard 170cm front bath panel	£39.61
E763901	Standard 75cm end bath panel	£30.10

Panels for Idealform Plus+ Bath

Ref	Model	Price
E479701	Unilux Plus+ 170cm front bath panel	£119.35
E483201	Unilux Plus+ 75cm end bath panel	£59.66

ALSO AVAILABLE IN

SINGLE ENDED 45

Retail price inc. VAT

Double Ended Bath | 170x75cm

Tempo Arc

170x75cm
Double Ended Bath

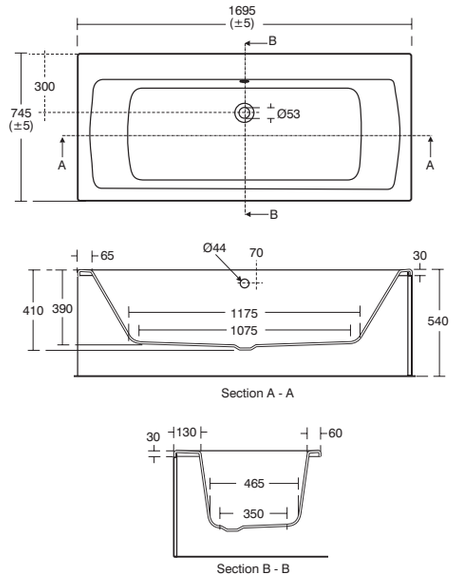

Tempo Arc 170x75cm Double Ended Bath

Ref	Model	Price
E256601	No tapholes	£232.27

water label 180 Litres

Tempo Arc 170x75cm Idealform Plus+ Double Ended Bath

Ref	Model	Price
E257801	No tapholes	£362.75

water label 180 Litres

Panels

Ref	Model	Price
E319401	Unilux 170cm front bath panel	£119.35
E319501	Unilux 75cm end bath panel	£63.94

Panels for Idealform Plus+

Ref	Model	Price
E479701	Unilux Plus+ 170cm front bath panel	£119.35
E483201	Unilux Plus+ 75cm end bath panel	£59.66

ALSO AVAILABLE IN

SINGLE ENDED 28

Retail price inc. VAT

Double Ended Bath | 170x75cm

Tempo Cube

170x75cm
Double Ended Bath

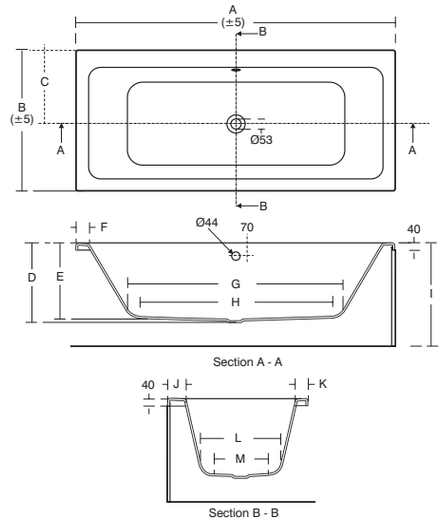

	A	B	C	D	E	F	G	H	I	J	K	L	M
1700 x 75	1695	745	390	420	410	65	1155	1030	550	90	60	435	295
1800 x 80	1795	795	410	475	465	70	1190	1065	595	85	80	445	305

Tempo Cube 170x75cm Double Ended Bath

Ref	Model	Price
E258301	No tapholes	£280.55

water label 200 Litres

Tempo Cube 170x75cm Idealform Plus+ Double Ended Bath

Ref	Model	Price
E258901	No tapholes	£411.02

water label 200 Litres

Panels

Ref	Model	Price
E319401	Unilux 170cm front bath panel	£119.35
E319501	Unilux 75cm end bath panel	£63.94

Panels for Idealform Plus+

Ref	Model	Price
E479701	Unilux Plus+ 170cm front bath panel	£119.35
E483201	Unilux Plus+ 75cm end bath panel	£59.66

ALSO AVAILABLE IN

SINGLE ENDED 44

Retail price inc. VAT

IDEALFORM IDEALFORM PLUS+

Double Ended Bath | 170x75cm

Jasper Morrison

170x75cm
Double Ended Bath

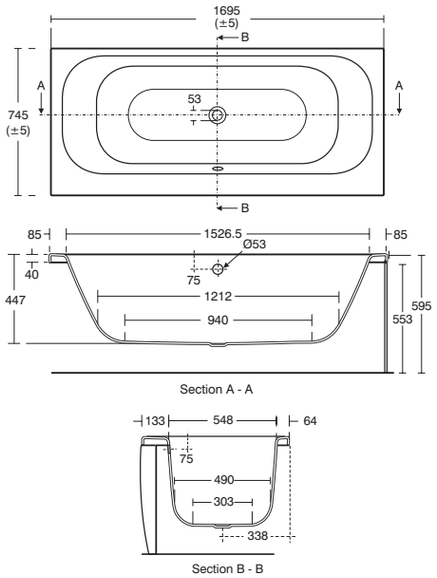

Jasper Morrison 170x75cm Double Ended Bath

Ref	Model	Price
E635401	No tapholes	£594.38

water label 221 Litres

Panels

Ref	Model	Price
E635501	Jasper Morrison 170cm front bath panel	£158.50
E635601	Jasper Morrison 75cm end bath panel	£69.36

Waste

Ref	Model	Price
K8029AA	Multiplex bath waste and overflow	£138.43

Retail price inc. VAT

IDEALFORM

Double Ended Bath | 170x75cm

Concept

170x75cm
Double Ended Bath

IDEALFORM IDEALFORM PLUS+

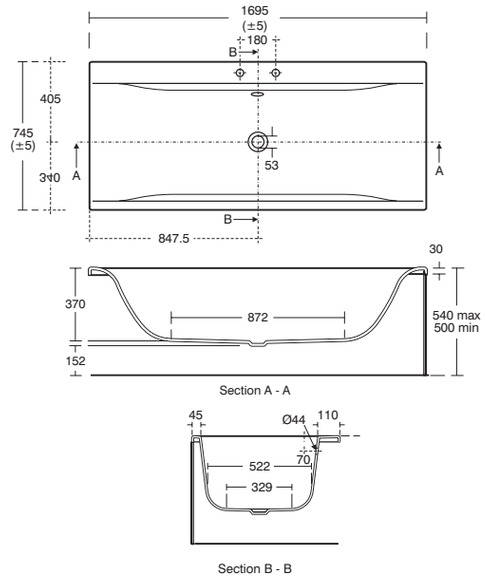

Concept 170x75cm Double Ended Bath

Ref	Model	Price
E729901	Two tapholes	£356.12
E735801	No tapholes	£356.12

water label 200 Litres

Concept 170x75cm Idealform Plus+ Double Ended Bath

Ref	Model	Price
E860401	No tapholes	£439.91

water label 200 Litres

Panels

Ref	Model	Price
E319401	Unilux 170cm front bath panel	£119.35
E319501	Unilux 75cm end bath panel	£63.94

Panels for Idealform Plus+

Ref	Model	Price
E479701	Unilux Plus+ 170cm front bath panel	£119.35
E483201	Unilux Plus+ 75cm end bath panel	£59.66

ALSO AVAILABLE IN
SINGLE ENDED 42
SHOWER BATH 63 & 64

Retail price inc. VAT

KR	KS	SO	SX	WG
Gloss Grey	Elm	American Oak	Dark Walnut	Gloss White

Unilux 170cm front bath panel for standard height baths

Ref	Model	Price
E6500SO	American Oak	£254.59
E6500SX	Dark Walnut	£254.59
E6500WG	Gloss White	£254.59
E6500KR	Gloss Grey	£282.88
E6500KS	Elm	£254.59

Unilux 75cm end bath panel for standard height baths

Ref	Model	Price
E6501SO	American Oak	£146.40
E6501SX	Dark Walnut	£146.40
E6501WG	Gloss White	£146.40
E6501KR	Gloss Grey	£162.65
E6501KS	Elm	£146.40

Retail price inc. VAT

Double Ended Bath | 170x75cm

White

170x80cm
Idealcast Double Ended Bath

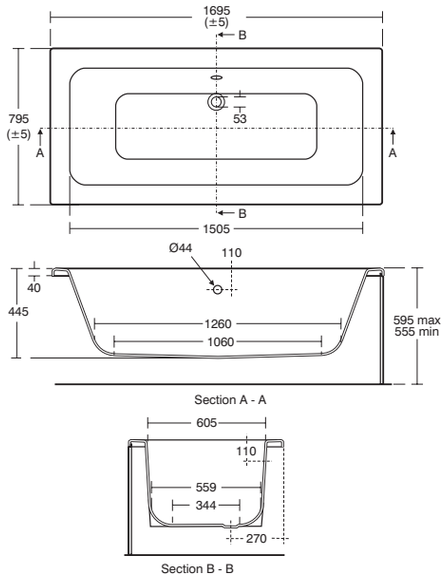

White 170x80cm Idealcast Double Ended Bath

Ref	Model	Price
E002301	No tapholes	£666.12

water label 230 Litres

Panels

Ref	Model	Price
E002401	White 170cm front bath panel	£195.79
E002501	White 80cm end bath panel	£95.88

Retail price inc. VAT

Tempo Cube

180x80cm
Double Ended Bath

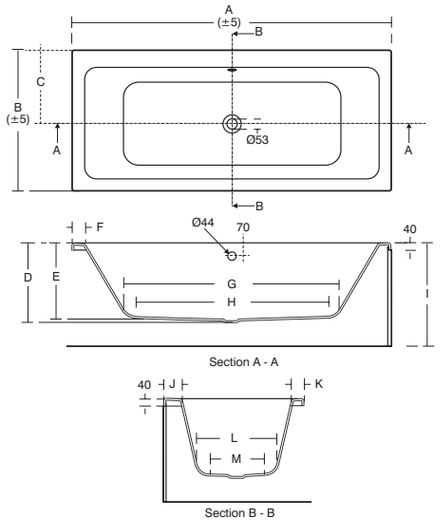

	A	B	C	D	E	F	G	H	I	J	K	L	M
1700 x 75	1695	745	390	420	410	65	1155	1030	550	90	60	435	295
1800 x 80	1795	795	410	475	465	70	1190	1065	595	85	80	445	305

Tempo Cube 180x80cm Double Ended Bath

Ref	Model	Price
E258401	No tapholes	£358.84

water label 248 Litres

Tempo Cube 180x80cm Idealform Plus+ Double Ended Bath

Ref	Model	Price
E259201	No tapholes	£502.37

water label 248 Litres

Panels

Ref	Model	Price
E260601	Tempo Cube 180cm front bath panel	£195.73
E260701	Tempo Cube 80cm end bath panel	£117.43

IDEALFORM PLUS+
DECEPTIVELY STRONG, AMAZINGLY RIGID.

- More than double the reinforcement and strength
- Exceptional insulation
- No creaking

Retail price inc. VAT

Jasper Morrison

180x85cm

Asymmetric Double Ended Bath

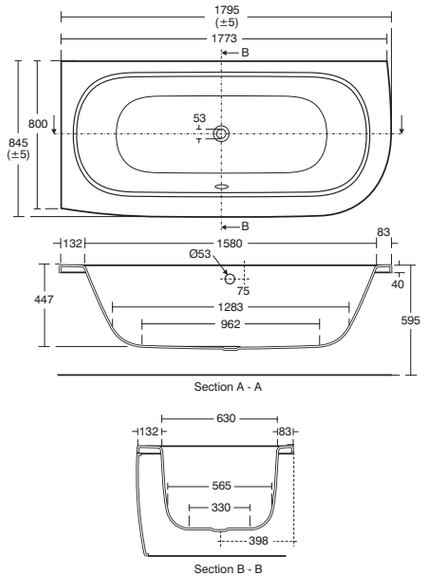

Jasper Morrison 180x85cm Asymmetric Double Ended Bath

Ref	Model	Price
E635101	No tapholes – right hand bath	£851.94
E635001	No tapholes – left hand bath	£851.94

water label 234 Litres

Panels

Ref	Model	Price
E635301	Jasper Morrison bath panel – right hand asymmetric	£237.77
E635201	Jasper Morrison bath panel – left hand asymmetric	£237.77

water label 234 Litres

Wastes

Ref	Model	Price
K8029AA	Multiplex bath waste and overflow	£138.43

Image and drawing refers to left hand bath

Retail price inc. VAT

SHOWER BATHS

From manic morning moments under the shower to lazy weekend evenings among the bubbles. A favourite with families who enjoy the all-in-one flexibility.

Concept

150x85cm
Square Shower Bath

IDEALFORM | IDEALFORM PLUS+

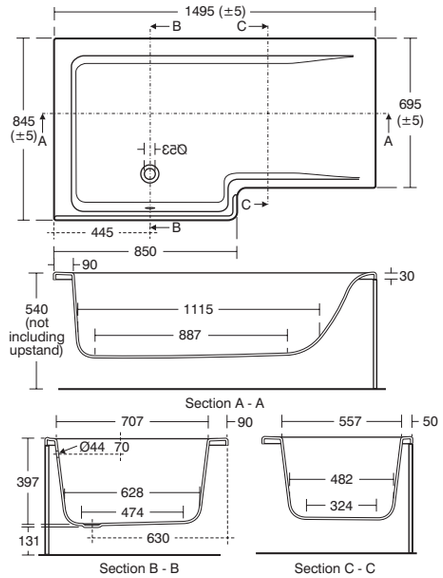

Concept 150x85cm Square Shower Bath

Ref	Model	Price
E049401	No tapholes – right hand bath	£379.32
E049501	No tapholes – left hand bath	£379.32

water label 197 Litres

Concept 150x85cm Idealform Plus+ Square Shower Bath

Ref	Model	Price
E049601	No tapholes – right hand bath	£539.03
E049701	No tapholes – left hand bath	£539.03

water label 197 Litres

Panels

Ref	Model	Price
E050601	Concept 150cm Square Shower Bath front panel	£135.76
E316901	Unilux 70cm end panel	£59.66

Screen

Ref	Model	Price
E0508EO	Unilux Square Shower Bath Screen – clear glass, bright silver	£352.70

Image and drawing refers to left hand bath

Retail price inc. VAT

IFP+

IDEALFORM PLUS+
DECEPTIVELY STRONG, AMAZINGLY RIGID.

- More than double the reinforcement and strength
- Exceptional insulation
- No creaking

KR	KS	SO	SX	WG
Gloss Grey	Elm	American Oak	Dark Walnut	Gloss White

Unilux 150cm Square Shower Bath Front Panel

Ref	Model	Price
E0507KR	RH, Gloss Grey	£292.80
E0516KR	LH, Gloss Grey	£292.80
E0507KS	RH, Elm	£266.18
E0516KS	LH, Elm	£266.18
E0507SO	RH, American Oak	£266.18
E0516SO	LH, American Oak	£266.18
E0507SX	RH, Dark Walnut	£266.18
E0516SX	LH, Dark Walnut	£266.18
E0507WG	RH, Gloss White	£266.18
E0516WG	LH, Gloss White	£266.18

Unilux 70cm Square Shower Bath End Panel

Ref	Model	Price
E0532KR	Gloss Grey	£117.12
E0532KS	Elm	£106.48
E0532SO	American Oak	£106.48
E0532SX	Dark Walnut	£106.48
E0532WG	Gloss White	£106.48

Retail price inc. VAT

Square Shower Bath | 150x85cm

Space

150x70cm
Shower Bath

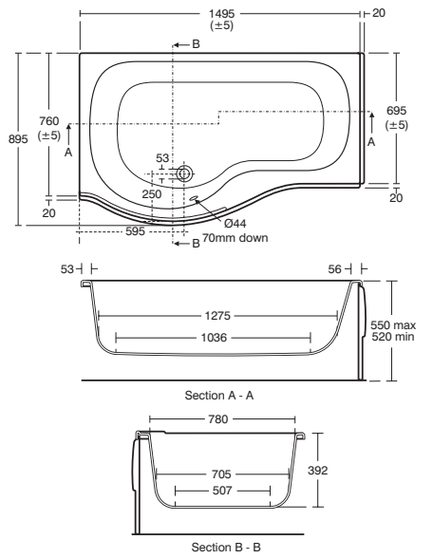

Space 150x70cm Shower Bath

Ref	Model	Price
E707401	No tapholes – right hand bath	£648.22
E706401	No tapholes – left hand bath	£648.22

water label 162 Litres

Space 150x70cm Idealform Plus+ Shower Bath

Ref	Model	Price
E493501	No tapholes – right hand bath	£648.22
E493401	No tapholes – left hand bath	£648.22

water label 162 Litres

Panels

Ref	Model	Price
E723101	Space 150cm Shower Bath front panel – left hand	£198.48
E724101	Space 150cm Shower Bath front panel – right hand	£198.48
E414001	Uniline 70cm end bath panel	£63.89

Retail price inc. VAT

Alto

170x80cm
Shower Bath

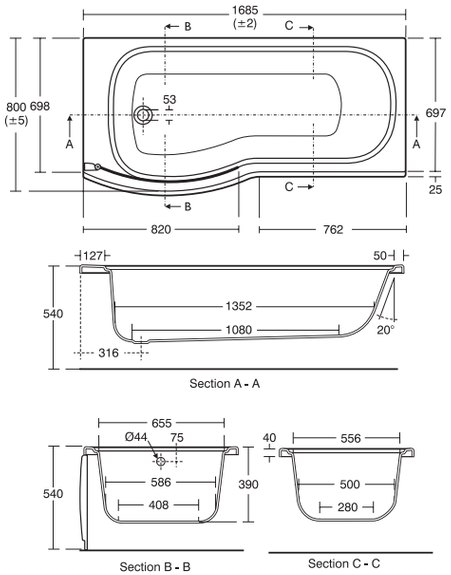

Alto 170x80cm Shower Bath

Ref	Model	Price
E760301	No tapholes – right hand bath	£257.30
E760201	No tapholes – left hand bath	£257.30

water label 207 Litres

Alto 170x80cm Idealform Plus+ Shower Bath

Ref	Model	Price
E764401	No tapholes – right hand bath	£413.76
E764601	No tapholes – left hand bath	£413.76

water label 207 Litres

Front Panels

Ref	Model	Price
E760401	Alto 170cm Shower Bath front panel – left hand	£83.08
E760501	Alto 170cm Shower Bath front panel – right hand	£83.08
E760601	Alto Shower Bath end panel	£41.60

Shower Screen

Ref	Model	Price
E7607AA	Alto Shower Bath curved bath shower screen – clear glass	£267.31

Image and drawing refers to left hand bath

ALSO AVAILABLE IN

SINGLE ENDED RECTANGULAR 36

Retail price inc. VAT

Create

170x85cm
Idealcast Shower Bath

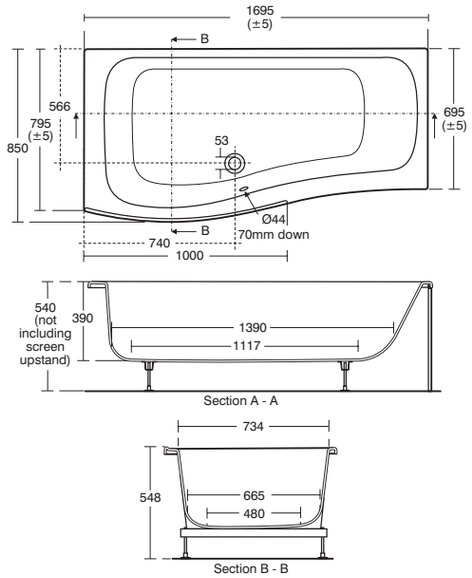

Create 170x85cm Idealcast Shower Bath

Ref	Model	Price
E317201	No tapholes – right hand shower bath	£786.29
E317101	No tapholes – left hand shower bath	£786.29

water label 203 Litres

Panels

Ref	Model	Price
E316801	Create 170cm Shower Bath front panel	£136.14
E316901	Unilux 70cm end bath panel	£59.66

Screen

Ref	Model	Price
L9120AA	Create Shower Bath curved bath shower screen – clear glass	£641.41

Image refers to right hand bath, drawing refers to left hand bath

Retail price inc. VAT

Idealcast Shower Bath | 170x85cm

IC IDEALCAST

Concept

170x90cm
Shower Bath

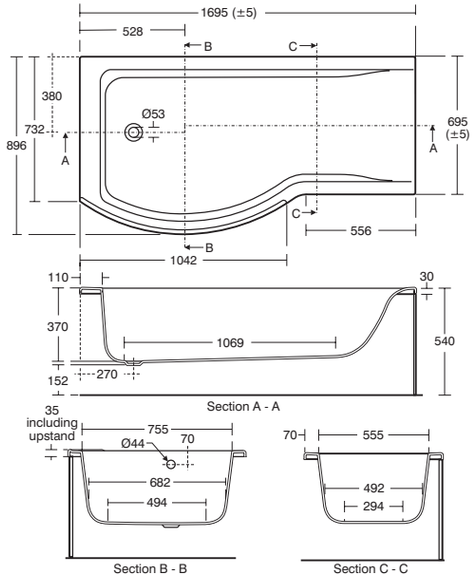

Concept 170x90cm Shower Bath

Ref	Model	Price
E731501	No tapholes – right hand shower bath	£381.53
E731601	No tapholes – left hand shower bath	£381.53

water label 232 Litres

Concept 170x90cm Idealform Plus+ Shower Bath

Ref	Model	Price
E860601	No tapholes – right hand shower bath	£466.32
E860801	No tapholes – left hand shower bath	£466.32

water label 232 Litres

Panels

Ref	Model	Price
E731701	Concept 170cm Shower Bath front panel	£134.34
E316901	Unilux 70cm end bath panel	£59.66

Screen

Ref	Model	Price
E7407AA	Concept Shower Bath curved screen – clear glass	£353.64

Image refers to right hand bath, drawing refers to left hand bath

ALSO AVAILABLE IN

SQUARE 64

Retail price inc. VAT

IF IDEALFORM IFP+ IDEALFORM PLUS+

Shower Bath | 170x90cm

Concept

170x85cm
Square Shower Bath

IF IDEALFORM

IFP+ IDEALFORM PLUS+

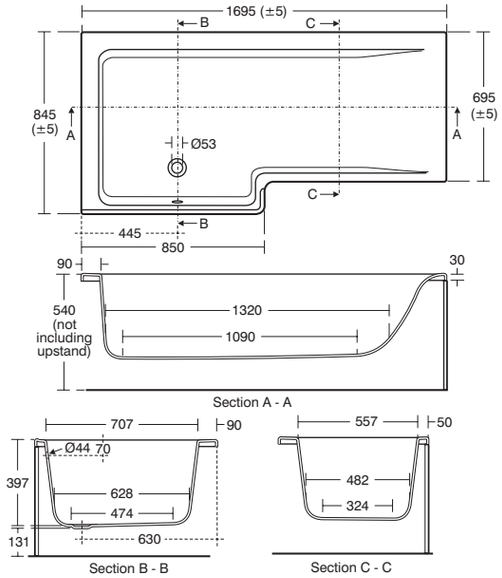

Concept 170x85cm Square Shower Bath

Ref	Model	Price
E051101	No tapholes – right hand bath	£379.32
E051201	No tapholes – left hand bath	£379.32

water label 225 Litres

Concept 170x85cm Idealform Plus+ Square Shower Bath

Ref	Model	Price
E049101	No tapholes – right hand bath	£539.03
E049201	No tapholes – left hand bath	£539.03

water label 225 Litres

Panels

Ref	Model	Price
E050401	Concept 170cm Square Shower Bath front panel	£135.76
E316901	Unilux 70cm end bath panel	£59.66

Screen

Ref	Model	Price
E0508EO	Concept Square Shower Bath screen, clear glass – bright silver	£352.70

Image and drawing refers to left hand bath

ALSO AVAILABLE IN

CURVED 63

Retail price inc. VAT

IFP+

IDEALFORM PLUS+
DECEPTIVELY STRONG, AMAZINGLY RIGID.

- More than double the reinforcement and strength
- Exceptional insulation
- No creaking

KR	KS	SO	SX	WG
Gloss Grey	Elm	American Oak	Dark Walnut	Gloss White

Unilux 170cm Square Shower Bath Front Panel

Ref	Model	Price
E0505KR	RH, Gloss Grey	£292.80
E0515KR	LH, Gloss Grey	£292.80
E0505KS	RH, Elm	£266.18
E0515KS	LH, Elm	£266.18
E0505SO	RH, American Oak	£266.18
E0515SO	LH, American Oak	£266.18
E0505SX	RH, Dark Walnut	£266.18
E0515SX	LH, Dark Walnut	£266.18
E0505WG	RH, Gloss White	£266.18
E0515WG	LH, Gloss White	£266.18

Unilux 70cm Square Shower Bath End Panel

Ref	Model	Price
E0532KR	Gloss Grey	£117.12
E0532KS	Elm	£106.48
E0532SO	American Oak	£106.48
E0532SX	Dark Walnut	£106.48
E0532WG	Gloss White	£106.48

Retail price inc. VAT

Square Shower Bath | 170x85cm

Space

170x70cm
Shower Bath

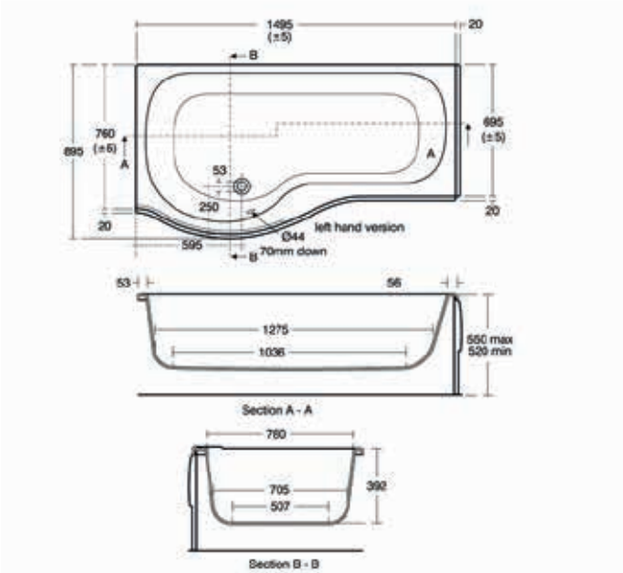

Space 170x70cm Shower Bath

Ref	Model	Price
E734401	No tapholes – right hand bath	£648.22
E732401	No tapholes – left hand bath	£648.22

water label 204 Litres

Space 170x70cm Idealform Plus+ Shower Bath

Ref	Model	Price
E495801	No tapholes – right hand bath	£648.22
E495701	No tapholes – left hand bath	£648.22

water label 204 Litres

Panels

Ref	Model	Price
E731101	Space 170cm Shower Bath front panel – right hand	£198.48
E730101	Space 170cm Shower Bath front panel – left hand	£198.48
E414001	Uniline 70cm end bath panel	£63.89

Screen

Ref	Model	Price
E6956AA	Space Shower Bath curved shower screen – clear glass	£653.92

Image and drawing refers to left hand bath

Retail price inc. VAT

IDEALFORM IDEALFORM PLUS+

Shower Bath | 170x70cm

Concept Air

170x80cm
Shower Bath

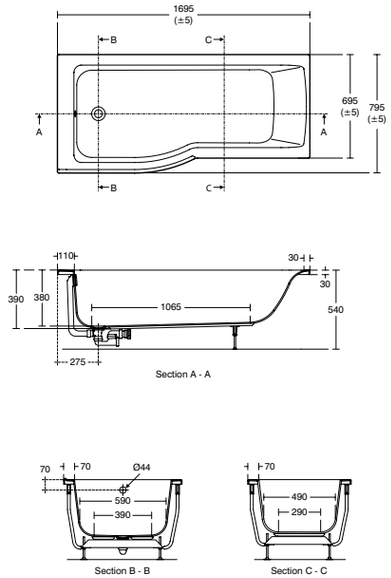

Concept Air 170x80cm Shower Bath

Ref	Model	Price
E108301	No tapholes – right hand bath	£300.00
E108101	No tapholes – left hand bath	£300.00

water label 193 Litres

Concept Air 170x80cm Idealform Plus+ Shower Bath

Ref	Model	Price
E114501	No tapholes – right hand bath	£408.00
E114301	No tapholes – left hand bath	£408.00

water label 193 Litres

Panels

Ref	Model	Price
E108201	Concept Air 170cm Shower Bath front panel	£114.00
E316901	Unilux 70cm end bath panel	£59.66

Screen

Ref	Model	Price
E1085EO	Concept Air Shower Bath Screen with access panel	£324.00

Image and drawing refers to left hand bath

Retail price inc. VAT

IDEALFORM IDEALFORM PLUS+

Shower Bath | 170x80cm

Tempo Arc

170x80cm
Shower Bath

IDEALFORM IDEALFORM PLUS+

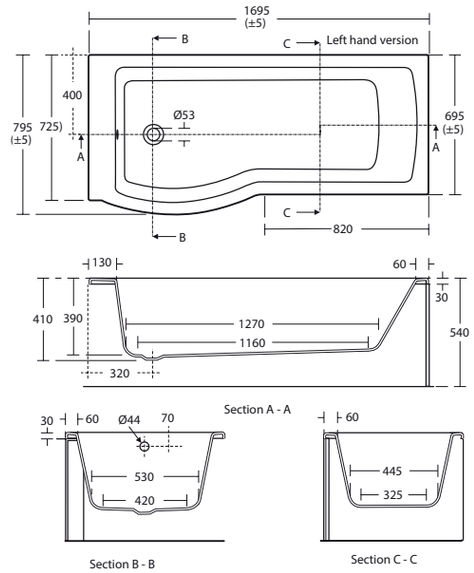

Tempo Arc 170x80cm Shower Bath

Ref	Model	Price
E256701	No tapholes – right hand bath	£260.96
E256801	No tapholes – left hand bath	£260.96

water label 195 Litres

Tempo Arc 170x80cm Idealform Plus+ Shower Bath

Ref	Model	Price
E257401	No tapholes – right hand bath	£404.51
E257601	No tapholes – left hand bath	£404.51

water label 195 Litres

Panels

Ref	Model	Price
E256901	Tempo Arc 170cm Shower Bath front panel	£78.30
E316901	Unilux 70cm end panel	£59.66

Screen

Ref	Model	Price
E2571EO	Tempo Arc Shower Bath screen	£215.30

Image and drawing refers to left hand bath

Tempo Cube

170x85cm
Shower Bath

IDEALFORM IDEALFORM PLUS+

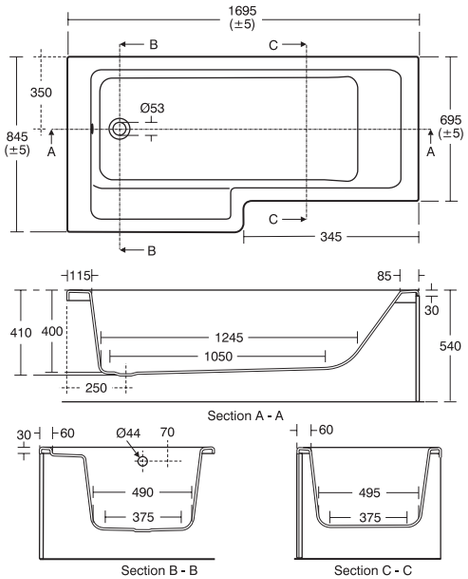

Tempo Cube 170x85cm Shower Bath

Ref	Model	Price
E259401	No tapholes – right hand bath	£300.12
E259501	No tapholes – left hand bath	£300.12

water label 190 Litres

Tempo Cube 170x85cm Idealform Plus+ Shower Bath

Ref	Model	Price
E259801	No tapholes – right hand bath	£443.64
E260101	No tapholes – left hand bath	£443.64

water label 190 Litres

Panels

Ref	Model	Price
E259601	Tempo Cube 170cm Shower Bath front panel	£133.09
E316901	Unilux 70cm end panel	£59.66

Screen

Ref	Model	Price
E2597EO	Tempo Cube Shower Bath screen	£267.49

Image and drawing refers to left hand bath

Space

120x70cm
Rectangular Shower Bath

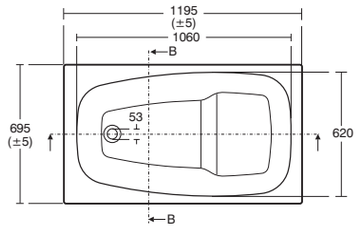

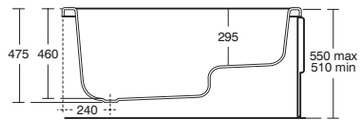

Section A - A

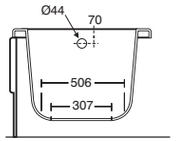

Section B - B

when fitted with Uniline panels the floor will require recessing to fit a waste

Space 120x70cm Rectangular Shower Bath

Ref	Model	Price
E728401	No tapholes	£485.32

water label 170 Litres

Panels

Ref	Model	Price
E729001	Uniline 120cm front bath panel	£128.63
E414001	Uniline 70cm end bath panel	£63.89

Retail price inc. VAT

Showertub

120x75cm
Rectangular Shower Bath

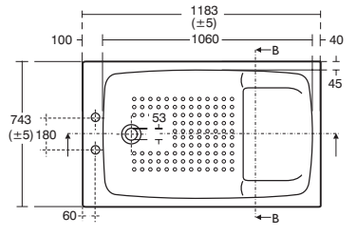

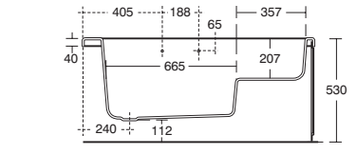

Section A - A

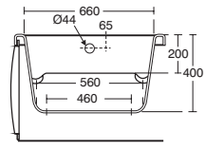

Section B - B

Showertub 120x75cm Rectangular Shower Bath

Ref	Model	Price
S125401	No grips – two tapholes	£493.55

water label 148 Litres

Panel

Ref	Model	Price
S092501	Universal 120cm front bath panel	£115.12

Retail price inc. VAT

ACCESSIBLE BATHS

Functionality meets luxury. A bath designed for all ages, with unique features that makes bathing nothing but a time to relax.

REINFORCED LEDGE

The extra wide reinforced ledge is designed to sit on, creating endless practical uses, including a place to sit and dry, a place to keep somebody company, or help them bathe. It can also be used for support to get in and out of the bath.

LOWERED HEIGHT

A lowered bath height of 460mm gives more control when getting in and out of the bath.

INSIDE LEDGE

The handy step inside the bath makes it easy to manoeuvre around the bath, particularly to sit upright.

LUXURY ACCESSORIES

Why not add a touch of luxury to the bathing experience. The gel headrest supports the neck, whilst the contemporary support rails assist with getting in and out of the bath.

Concept Freedom

170x80cm Accessible Rectangular Bath

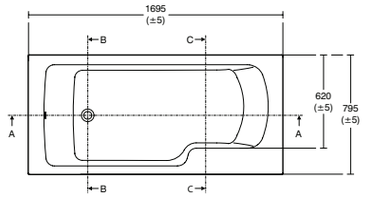

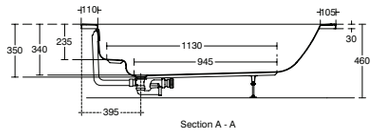

Section A - A

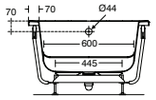

Section B - B

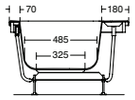

Section C - C

Concept Freedom 170x80cm Lowered Rectangular Bath with Support Features

Ref	Model	Price
E108801	No tapholes – right hand bath	£459.54
E108701	No tapholes – left hand bath	£459.54

water label 170 Litres

Concept Freedom Accessories

Ref	Model	Price
E109267	Gel headrest	£111.78
E1093AA	45cm Support rail	£136.62
E1094AA	60cm Support rail	£198.72

Panels (lowered height)

Ref	Model	Price
E109601	1700mm Front bath panel	£118.00
E109701	800mm End bath panel	£62.10

IFP+

IDEALFORM PLUS+
DECEPTIVELY STRONG, AMAZINGLY RIGID.

- More than double the reinforcement and strength
- Exceptional insulation
- No creaking

Retail price inc. VAT

IDEALFORM PLUS+

STEEL BATHS

Where style meets steel. Highly engineered for greater strength, easy to clean, great looking and long lasting.

Sandringham 21

150x70cm
Steel Bath

Armitage Shanks

ST STEEL

HG HANDGRIPS

AS ANTI-SLIP

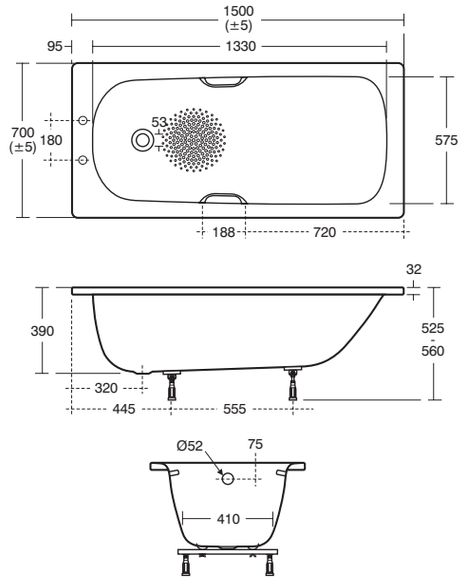

Sandringham 21 150x70cm Steel Bath

Ref	Model	Price
S183201	No tapholes – anti-slip	£290.53
S183301	Two tapholes – with chrome plated grips, anti-slip	£307.73

water label 150 Litres

Panels

Ref	Model	Price
S091501	Flat front bath panel	£61.25
S091601	Flat end bath panel	£31.80
S936501	Plastic bath panel corner strip	£8.62

Panels require trimming to size at installation. Framework is required at installation to support rim and secure panel.

Simplicity

150x70cm
Steel Bath

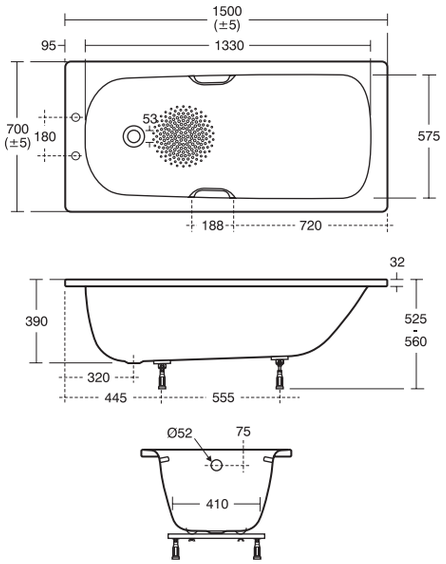

Simplicity 150x70cm Steel Bath

Ref	Model	Price
E818501	Two tapholes – with chrome plated grips, anti-slip	£307.73

water label 131 Litres

Panels

Ref	Model	Price
S091501	Flat front bath panel	£61.25
S091601	Flat end bath panel	£31.80
S936501	Plastic bath panel corner strip	£8.62

Ideal STANDARD

ST STEEL

HG HANDGRIPS

AS ANTI-SLIP

Steel Bath | 150x70cm

Simplicity

160x70cm
Steel Bath

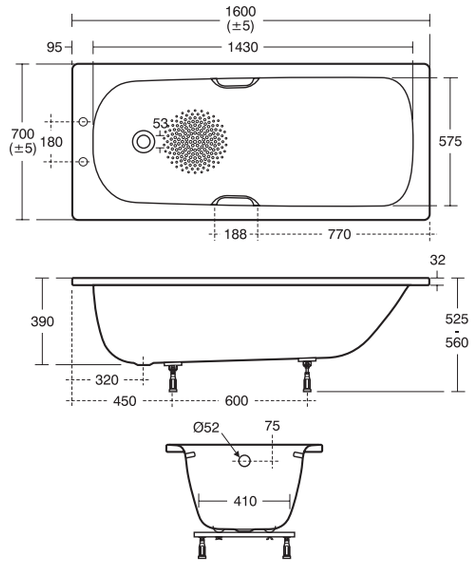

Simplicity 160x70cm Steel Bath

Ref	Model	Price
E818601	Two tapholes – with chrome plated grips, anti-slip	£307.73

water label 162 Litres

Panels

Ref	Model	Price
S091501	Flat front bath panel	£61.25
S091601	Flat end bath panel	£31.80
S936501	Plastic bath panel corner strip	£8.62

Panels require trimming to size at installation. Framework is required at installation to support rim and secure panel.

ST STEEL
HG HANDGRIPS
AS ANTI-SLIP

Sandringham 21

160x70cm
Steel Bath

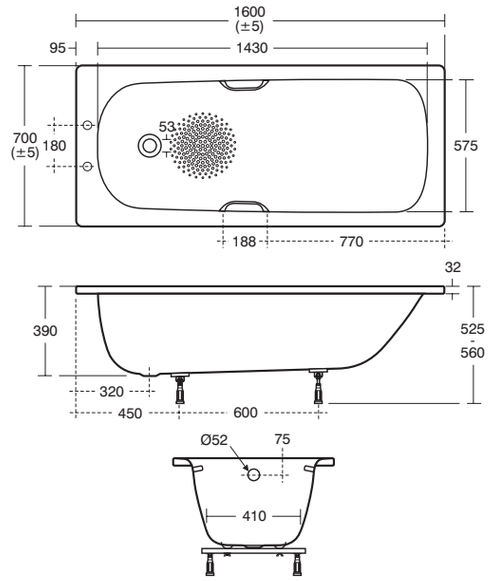

Sandringham 21 160x70cm Steel Bath

Ref	Model	Price
S183401	Two tapholes – with chrome plated grips, anti-slip	£307.73
S181901	No tapholes – with anti-slip	£264.02

water label 142 Litres

Panels

Ref	Model	Price
S091501	Flat front bath panel	£61.25
S091601	Flat end bath panel	£31.80
S936501	Plastic bath panel corner strip	£8.62

Armitage Shanks

ST STEEL
HG HANDGRIPS
AS ANTI-SLIP

Simplicity

170x70cm
Steel Bath

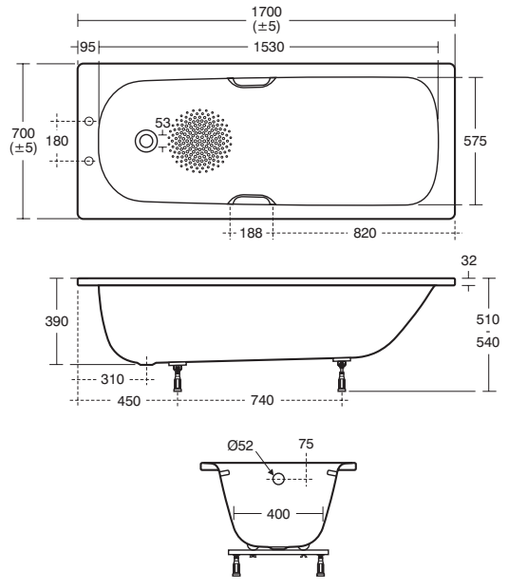

Simplicity 170x70cm Steel Bath

Ref	Model	Price
E818701	Two tapholes – with chrome plated grips, anti-slip	£307.73

water label 172 Litres

Panels

Ref	Model	Price
S091501	Flat front bath panel	£61.25
S091601	Flat end bath panel	£31.80
S936501	Plastic bath panel corner strip	£8.62

ST STEEL
HG HANDGRIPS
AS ANTI-SLIP

ALSO AVAILABLE IN
WATER SAVING 81

Retail price inc. VAT

Simplicity

170x70cm
Water Saving
Steel Bath

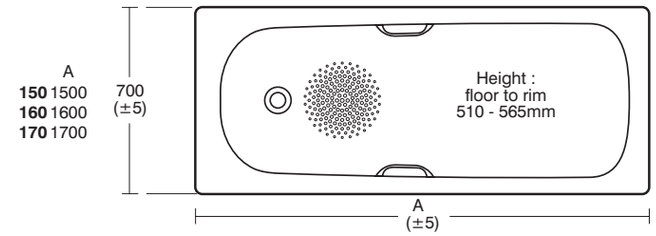

Simplicity 170x70cm Water Saving Steel Bath

Ref	Model	Price
E818801	Two tapholes – with chrome plated grips, anti-slip	£307.73

water label 130 Litres

Panels

Ref	Model	Price
S091501	Flat front bath panel	£61.25
S091601	Flat end bath panel	£31.80
S936501	Plastic bath panel corner strip	£8.62

ST STEEL
HG HANDGRIPS
AS ANTI-SLIP
WS WATER SAVING

Retail price inc. VAT

Sandringham 21

170x70cm
Steel Bath

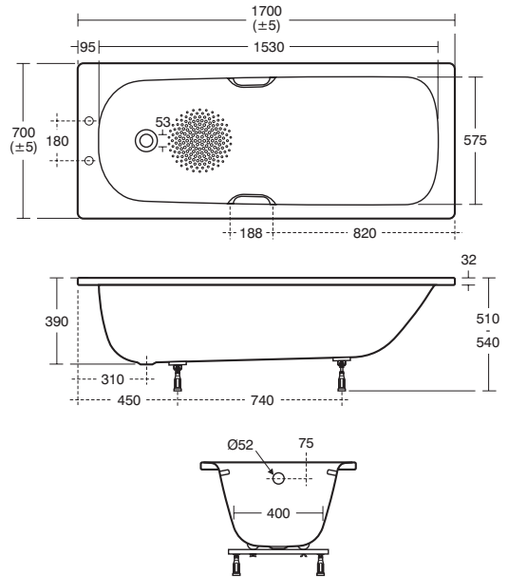

Sandringham 21 170x70cm Steel Bath

Ref	Model	Price
S183501	Two tapholes – with chrome plated grips, anti-slip	£307.73
S183801	No tapholes – with chrome plated grips, anti-slip	£307.73
S183601	Two tapholes	£244.68
S183701	No tapholes	£244.68
S181701	No tapholes – anti-slip	£264.02

water label 156 Litres

Sandringham 21 170x70cm Water Saving Steel Bath

Ref	Model	Price
S183901	Two tapholes – with chrome plated grips, anti-slip	£307.73

water label 130 Litres

Panels

Ref	Model	Price
S091501	Flat bath panel	£61.25
S091601	Flat end bath panel	£31.80
S936501	Plastic bath panel corner strip	£8.62

Retail price inc. VAT

Steel Bath | 170x70cm

Nisa

170x70cm
Steel Bath

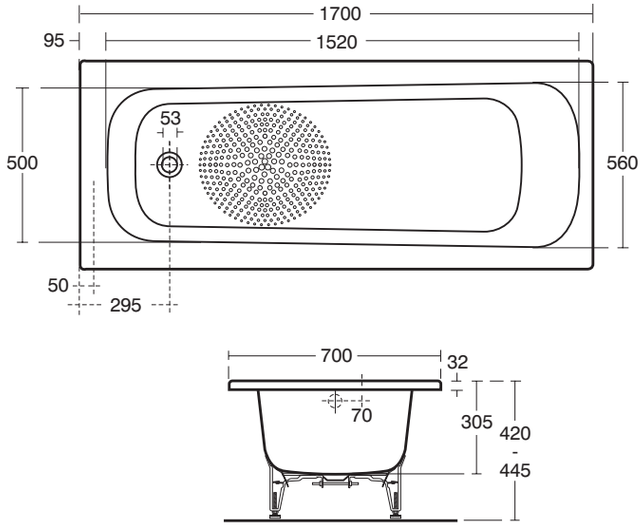

Nisa 170x70cm Steel Bath

Ref	Model	Price
S186401	No tapholes – with chrome plated grips, anti-slip	£832.68
S186301	Two tapholes – with chrome plated grips, anti-slip	£832.68
S186601	No tapholes – anti-slip	£776.02
S186501	Two tapholes	£776.02

water label 181 Litres

Nisa Lowline 170x70cm Steel Bath

Ref	Model	Price
S176601	No tapholes – with chrome plated grips, anti-slip	£857.41
S176501	Two tapholes – with chrome plated grips, anti-slip	£857.41
S169901	Anti-slip – no tapholes	£857.27

Reduced height of 420-445mm for easier access.

water label 147 Litres

Panels

Ref	Model	Price
S091501	Flat front bath panel	£61.25
S091601	Flat end bath panel	£31.80
S936501	Plastic bath panel corner strip	£8.62

3.2mm porcelain enamelled steel

Retail price inc. VAT

Steel Bath | 170x70cm

CORNER BATH

Fun and functional, a corner bath's ideal for smaller spaces.

Create

160cm
Corner Bath

IDEALFORM IDEALFORM PLUS+

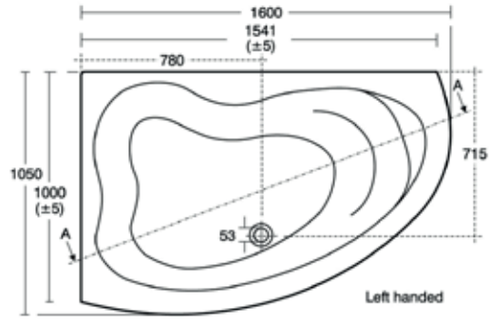

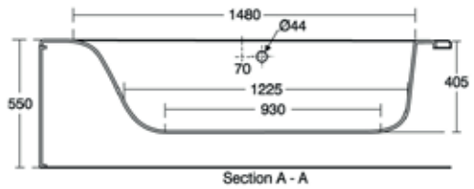

Create 160cm Corner Bath

Ref	Model	Price
E317701	No tapholes – right hand bath	£778.84
E317601	No tapholes – left hand bath	£778.84

water label 247 Litres

Panel

Ref	Model	Price
E318201	Create 160cm offset Corner Bath panel	£201.68

Screen

Ref	Model	Price
L9125AA	Create offset Corner Bath curved bath shower screen – clear glass	£641.41

Image and drawing shows left hand option

IDEALFORM PLUS+
DECEPTIVELY STRONG, AMAZINGLY RIGID.

- More than double the reinforcement and strength
- Exceptional insulation
- No creaking

Retail price inc. VAT

FREESTANDING BATHS

Where baths become water features. Fantastic focal points that add a touch of style to bathing spaces.

Concept Air

170x79cm
Idealform
Freestanding Bath

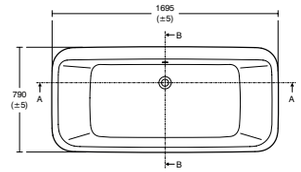

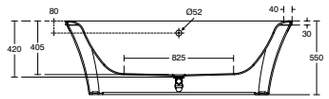

Section A - A

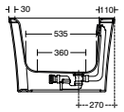

Section B - B

Concept Air 170x79cm Idealform Freestanding Bath

Ref	Model	Price
E107901	Freestanding bath and panel with tapdeck, no tapholes	£942.00

water label 191 Litres

*EASY TO INSTALL!

Retail price inc. VAT

Idealform Freestanding Bath | 170x79cm

Roll Top

170x80cm
Idealcast
Freestanding Bath

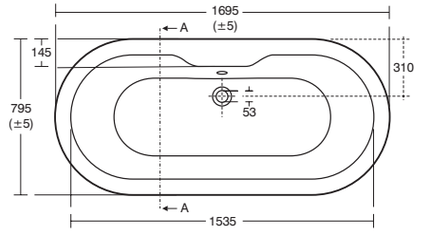

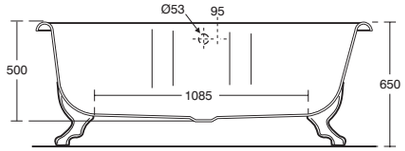

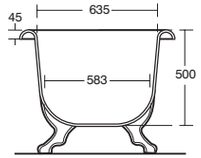

Section A - A

Roll Top 170x80cm Idealcast Freestanding Bath

Ref	Model	Price
E403001	No tapholes – with traditional cast iron feet	£1,714.36

water label 230 Litres

Wastes

Ref	Model	Price
E4961AA	Roll Top bath waste	£174.13

Retail price inc. VAT

Idealcast Freestanding Bath | 170x80cm

BATH PANELS

Style and substance are at the heart of our range of great looking, reliable panels.

Bath Panels

Why not upgrade your standard panel to a Uniline reinforced panel to give extra rigidity, or go for the super flat design of Unilux.

If you prefer a high gloss or wooden finish, why not co-ordinate with your Concept furniture. Why not add some colour and texture to your bathroom?

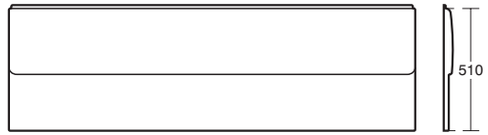

Standard

Ref	Model	Price
E762101	Standard 150cm bath front panel	£39.61
E422001	Standard 170cm bath front panel	£39.61
E423001	Standard 70cm end bath panel	£30.10
E763901	Standard 75cm end bath panel	£30.10

Uniline Reinforced panel for extra rigidity

Ref	Model	Price
E729001	Uniline 120cm front bath panel	£128.63
E413001	Uniline 170cm front bath panel	£119.75
E414001	Uniline 70cm end bath panel	£63.89
E419001	Uniline 75cm end bath panel	£63.89

*uniline

*unilux

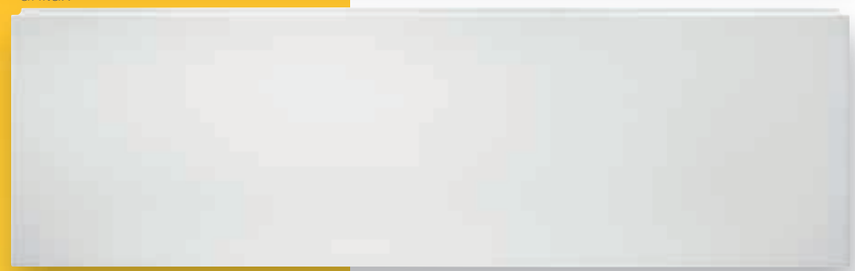

Retail price inc. VAT

Bath Panels

UNILUX WOODEN PANELS

For extra strength and rigidity

Unilux

Ref	Model	Price
E318301	Unilux 160cm front panel	£118.62
E319401	Unilux 170cm front panel	£119.35
E316901	Unilux 70cm end panel	£59.66
E319501	Unilux 75cm end panel	£63.94

Unilux 150cm front panel

Ref	Model	Price
E6499SO	American Oak	£254.59
E6499SX	Dark Walnut	£254.59
E6499WG	Gloss White	£254.59
E6499KR	Gloss Grey	£282.88
E6499KS	Elm	£254.59

Unilux 170cm front panel

Ref	Model	Price
E6500SO	American Oak	£254.59
E6500SX	Dark Walnut	£254.59
E6500WG	Gloss White	£254.59
E6500KR	Gloss Grey	£282.88
E6500KS	Elm	£254.59

Unilux 70cm end panel

Ref	Model	Price
E6502SO	American Oak	£133.68
E6502SX	Dark Walnut	£133.68
E6502WG	Gloss White	£133.68
E6502KR	Gloss Grey	£148.52
E6502KS	Elm	£133.68

Unilux 75cm end panel

Ref	Model	Price
E6501SO	American Oak	£146.40
E6501SX	Dark Walnut	£146.40
E6501WG	Gloss White	£146.40
E6501KR	Gloss Grey	£162.65
E6501KS	Elm	£146.40

Unilux Plus+ For use with Idealform Plus+ baths

Ref	Model	Price
E479601	150cm front bath panel for Idealform Plus+ only	£119.35
E479701	170cm front bath panel for Idealform Plus+ only	£119.35
E479801	180cm front bath panel for Idealform Plus+ only	£119.35
E483101	70cm end bath panel for Idealform Plus+ only	£59.66
E483201	75cm end bath panel for Idealform Plus+ only	£59.66
E483301	80cm end bath panel for Idealform Plus+ only	£63.94

KR – Gloss Grey

KS – Elm

SO – American Oak

SX – Dark Walnut

WG – Gloss White

Retail price inc. VAT

BATH SCREENS

Family-friendly, functional and decorative – there's a screen to suit all bathrooms.

New Connect

Angle Bath Screen

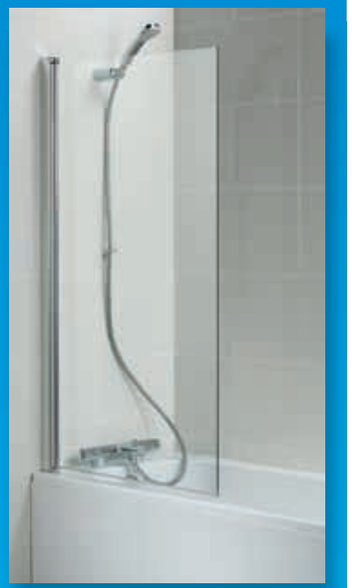

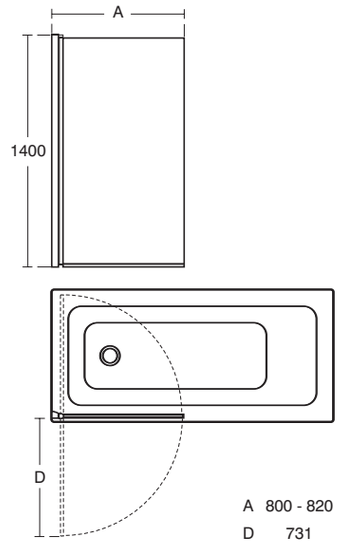

New Connect Angle Bath Screen

Ref	Model	Price
T9923EO	New Connect Angle Bath Screen – clear glass	£197.64

Suitable for rectangular baths

New Connect

Radius Bath Screen

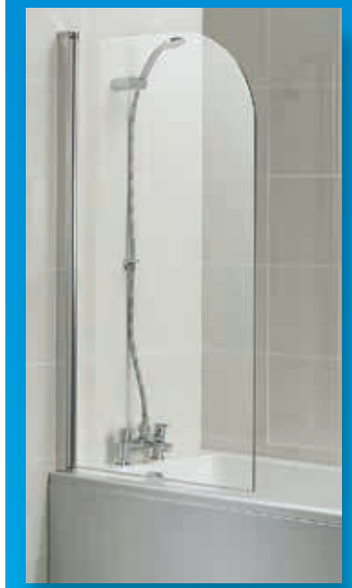

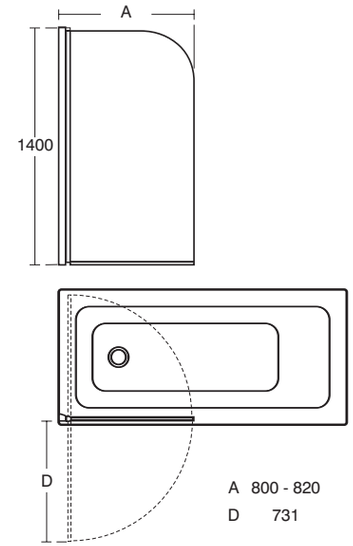

New Connect Radius Bath Screen

Ref	Model	Price
T9924EO	New Connect Radius Bath Screen – clear glass	£197.64

Suitable for rectangular baths

Connect Rialto

Bath Screen

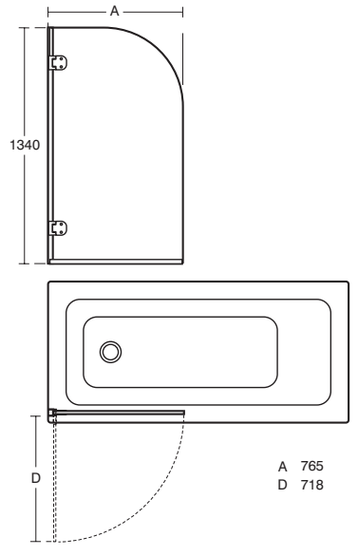

Connect Rialto Bath Screen

Ref	Model	Price
E1016AC	Connect Rialto Bath Shower Screen, without hinges – clear glass – White finish	£314.76
E1300AA	Rialto Bath Screen hinge set	£194.76

Hinges and screen to be ordered separately and must be ordered to complete the bath screen. **Suitable for rectangular baths**

New Connect

Folding Bath Screen

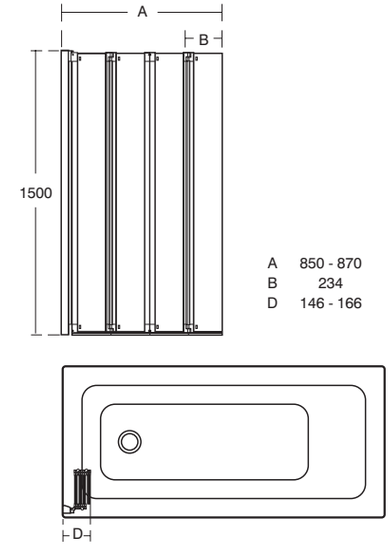

New Connect Folding Bath Screen

Ref	Model	Price
T9925EO	New Connect 4-Panel Folding Bath Screen – clear glass, silver finish	£385.97
T9926EO	New Connect 5-Panel Folding Bath Screen – clear glass, silver finish	£425.89

Suitable for rectangular baths

Connect

Shower Guard

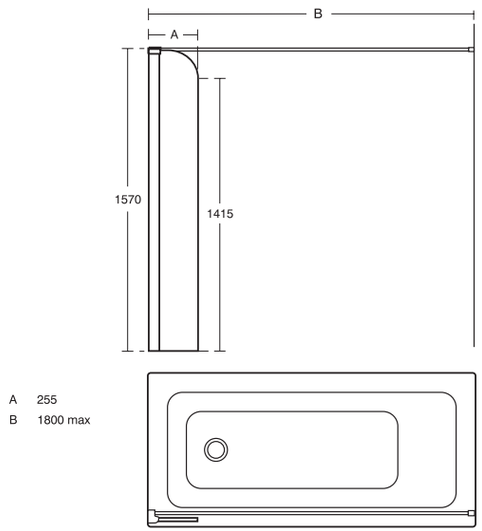

Connect Shower Guard

Ref	Model	Price
L8404AA	Connect Shower Guard – clear glass – with curtain pole for alcove installation	£419.47
L8406AA	Connect Shower Guard – clear glass – with curtain pole for corner installation	£419.47
L8403AA	Connect Shower Guard – clear glass	£249.71

Curtain and hooks not supplied

Retail price inc. VAT

Tempo Arc

Shower Bath Screen

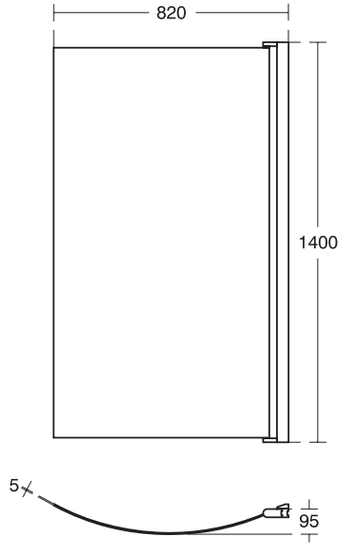

Tempo Arc Shower Bath Screen

Ref	Model	Price
E2571EO	Tempo Arc Shower Bath Screen	£215.30

Suitable for Tempo Arc Shower Baths. See page 68

Retail price inc. VAT

Tempo Cube

Shower Bath Screen

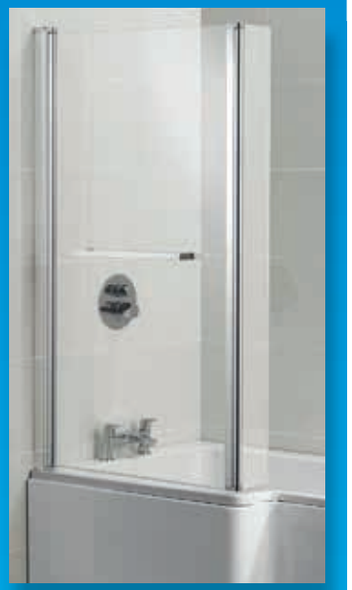

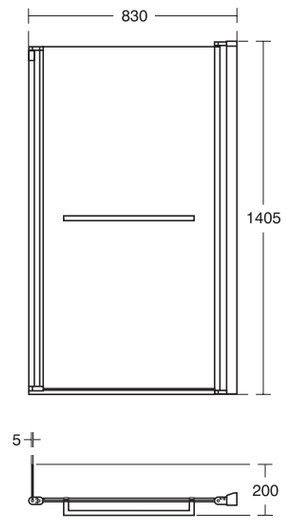

Tempo Cube Shower Bath Screen

Ref	Model	Price
E2597EO	Tempo Cube Shower Bath Screen	£267.49

Suitable for Tempo Cube shower baths. See page 69

Concept Air

Shower Bath Screen

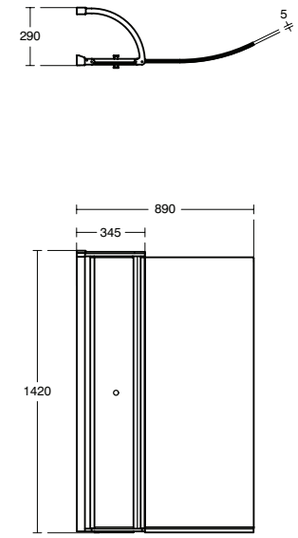

Concept Air Shower Bath Screen with Access Panel

Ref	Model	Price
E1085EO	Concept Air Shower Bath Screen with access panel	£324.00

Suitable for use on Concept Air Shower Bath. See page 67

Concept

Shower Bath Screen

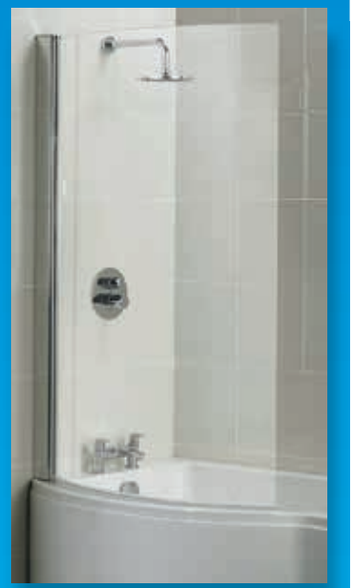

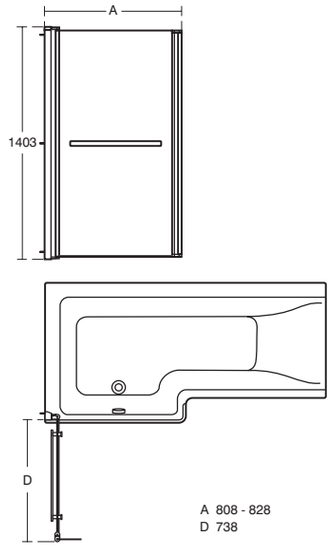

Concept Shower Bath Screen

Ref	Model	Price
E7407AA	Concept Shower Bath curved screen – clear glass	£353.64

Suitable for use on Concept shower bath. See page 63

Concept Square

Shower Bath Screen

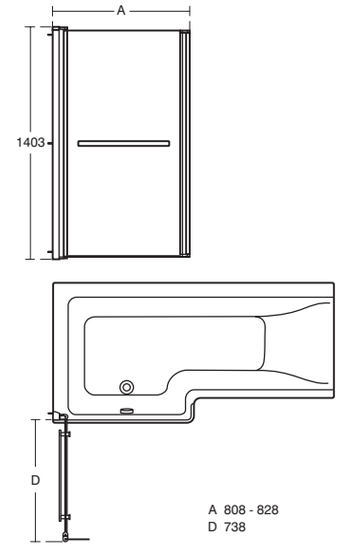

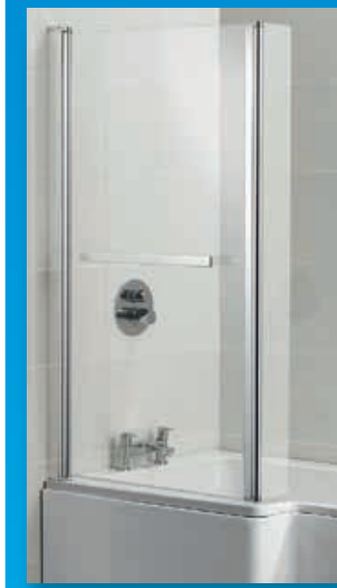

Concept Square Shower Bath Screen

Ref	Model	Price
E0508EO	Concept Square Shower Bath Screen – clear glass, bright silver	£352.70

Suitable for use on Concept Square Shower Bath. See page 64

Create

Shower Bath Screen

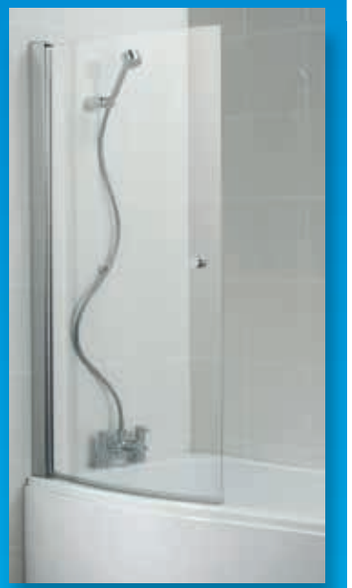

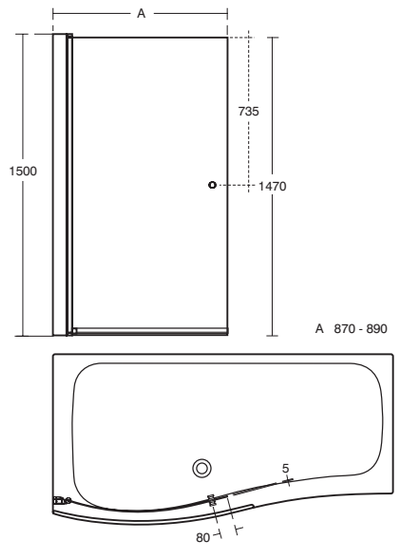

Create Shower Bath Screen

Ref	Model	Price
L9120AA	Create Shower Bath curved bath shower screen – clear glass	£641.41

Suitable for Create Shower Baths. See page 62

Create

Rectangular Bath Screen

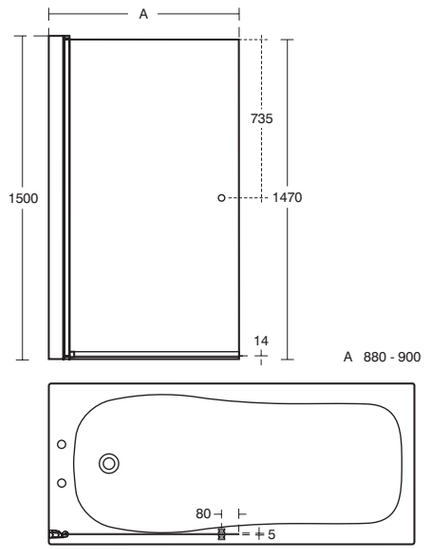

Create Rectangular Bath Screen

Ref	Model	Price
L9122AA	Create rectangular bath shower screen – clear glass	£427.61

Suitable for rectangular baths

Space

Shower Bath Screen

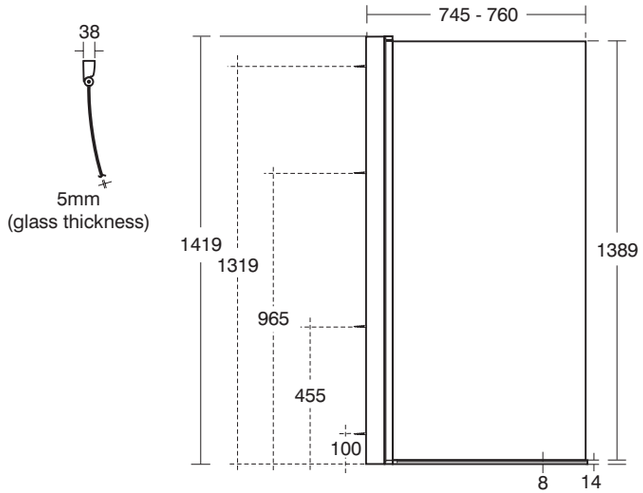

Space Shower Bath Screen

Ref	Model	Price
E6956AA	Space Bath curved shower screen – clear glass	£653.92

Suitable for Space Shower Bath. See page 66

Alto

Shower Bath Screen

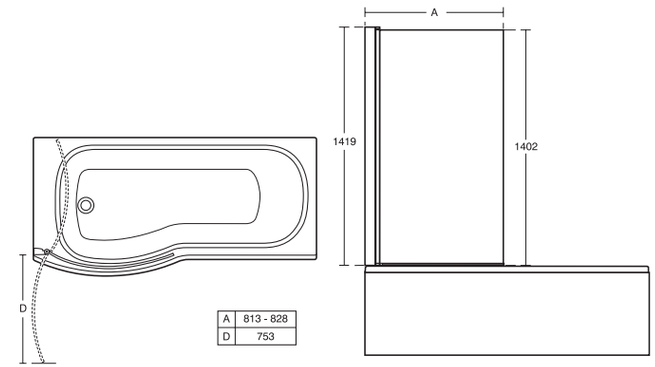

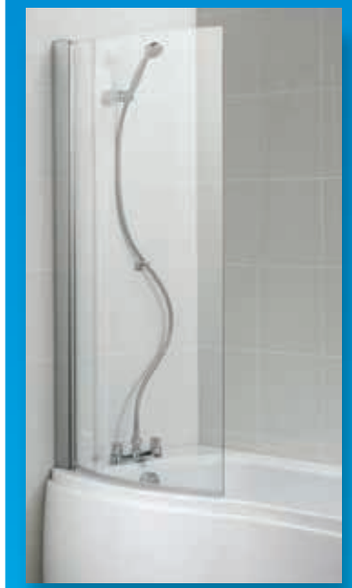

Alto Shower Bath Screen

Ref	Model	Price
E7607AA	Alto Shower Bath curved bath shower screen – clear glass	£267.31

Suitable for Alto shower baths only. See page 61

Create

Corner Bath Screen

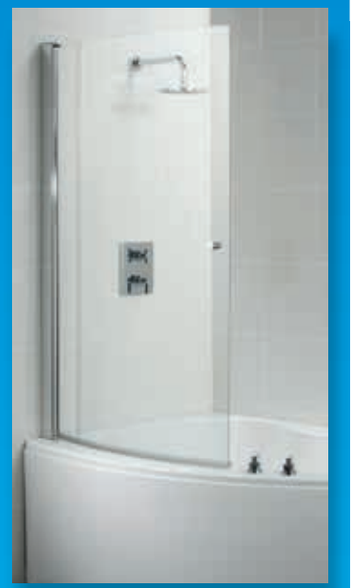

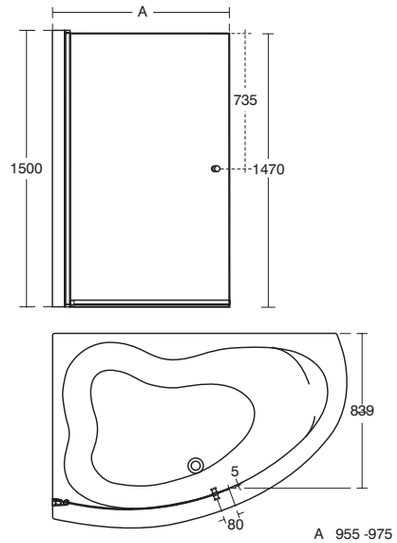

Create Corner Bath Screen

Ref	Model	Price
L9125AA	Create offset corner bath curved bath shower screen – clear glass	£641.41

Suitable only for Create offset corner baths. See page 86

Retail price inc. VAT

WASTES AND FITTINGS

Combining technology and lines.

Wastes and Fittings

S8790AA

Bath pop-up waste and overflow £130.00

S8830AA

Bath chain waste with plastic plug and overflow £21.37

Retail price inc. VAT

E579567

Bath pop-up waste assembly – working components only. £86.87

Operating handle and waste cover need ordering separately.

E5800AA

Bath pop-up waste operating handle and waste cover £52.93

E6791AA

Idealfill bath pop-up waste and overflow filler assembly. £243.02

Retail price inc. VAT

Bath Range Overview

RECTANGULAR BATHS

Page

Alto CT 20
150x70cm

Sandringham 21 21
150x70cm

Concept 22
150x70cm

Sandringham 21 24
160x70cm

Tesi 25
160x70cm

Sandringham 21 26
170x70cm

Sandringham 21 27
170x70cm

Tempo Arc 28
170x70cm

Tesi 29
170x70cm

Tempo Cube 30
170x70cm

Concept 31
170x70cm

Concept 32
170x70cm Handgrips

Concept 33
170x70cm Spacemaker Bath

Marina 34
170x70cm Idealform Plus+

Admiral 35
167x69cm Idealform Plus+

Alto 36
170x70cm

Alto CT 37
170x70cm

Plaza 38
170x70cm

Create 39
170x70cm

Jasper Morrison 40
170x70cm

Studio 41
170x70cm

Concept 42
170x75cm

Tempo Cube 44
170x75cm

Alto 45
170x75cm

Marina 46
180x70cm Idealform Plus+

DOUBLE ENDED BATHS

Page

Alto 48
170x75cm

Tempo Arc 49
170x75cm

Tempo Cube 50
170x75cm

Jasper Morrison 51
170x75cm

Concept 52
170x75cm

White 54
170x80cm Idealcast

Tempo Cube 55
180x80cm

Jasper Morrison 56
180x80cm Asymmetric

SHOWER BATHS

Page

Concept 58
150x85cm Square

Space 60
150x70cm

Alto 61
170x80cm

Create 62
170x85cm Idealcast

Concept 63
170x90cm

Concept 64
170x85cm Square

Space 66
170x70cm

Concept Air 67
170x80cm

Tempo Arc 68
170x80cm

Tempo Cube 69
170x85cm

Space 70
120x70cm Rectangular

Showertub 71
120x75cm Rectangular

ACCESSIBLE BATHS

Page

Concept Freedom 73
170x80cm

STEEL BATHS

Page

Sandringham 21 76
150x70cm

Simplicity 77
150x70cm

Simplicity 78
160x70cm

Sandringham 21 79
160x70cm

Simplicity 80
170x70cm

Simplicity 81
170x70cm

Sandringham 21 82
170x70cm

Nisa 83
170x70cm

CORNER BATH

Page

Create 86
160cm

FREESTANDING BATHS

Concept Air 88
170x79cm Idealform

Roll Top 89
170x80cm Idealcast

Bath Range Overview

Bath Range Size Overview

Bath Style	Size	Admiral	Alto	Alto CT	Concept	Concept Air	Concept Freedom	Create	Jasper Morrison	Marina	Nisa	Plaza	Roll Top	Sandringham 21	Showertub	Simplicity	Space	Studio	Tempo Arc	Tempo Cube	Tesi	White
Rectangular	150x70cm			20	22									21								
Rectangular	160x70cm													24							25	
Rectangular	167x69cm	35																				
Rectangular	170x70cm		36	37	31			39	40	34		38		26				41	28	30	29	
Rectangular	170x75cm		45		42															44		
Rectangular	170x80cm						73															
Rectangular	180x70cm									46												
Rectangular	180x80cm																					
Double Ended	170x75cm		48		52				51										49	50		
Double Ended	170x80cm																					54
Double Ended	180x80cm								56											55		
Shower Bath	120x70cm																70					
Shower Bath	150x85cm				58																	
Shower Bath	150x90cm																60					
Shower Bath	170x75cm																					
Shower Bath	170x80cm		61			67													68			
Shower Bath	170x85cm				64			62												69		
Shower Bath	170x90cm				63												66					
Showertub	120x75cm														71							
Steel Bath	150x70cm													76		77						
Steel Bath	160x70cm													79		78						
Steel Bath	170x70cm										83			82		80						
Corner Bath								86														
Freestanding Bath						88							89									
Space Saving Bath					33																	
Water Saving Bath			36	37												81			28	30	29	

Notes

IdealPRO

EXTENDED WARRANTIES FOR YOUR CUSTOMERS

EXCLUSIVE MEMBER OFFERS AND PROMOTIONS

DEDICATED MEMBER TELEPHONE **SUPPORT HELPLINE**

24HR ACCESS TO TRAINING AND INSTALLATION GUIDES

LOYALTY POINTS ON YOUR PURCHASES

Ideal STANDARD | Armitage Shanks

Ideal Standard (UK) Ltd
The Bathroom Works, National Avenue, Kingston Upon Hull, HU5 4HS, England
Tel: 01482 346461 Fax: 01482 445886 www.idealstandard.co.uk

www.ideal-standard.co.uk

www.fastpart-spares.co.uk

www.idealpro.co.uk

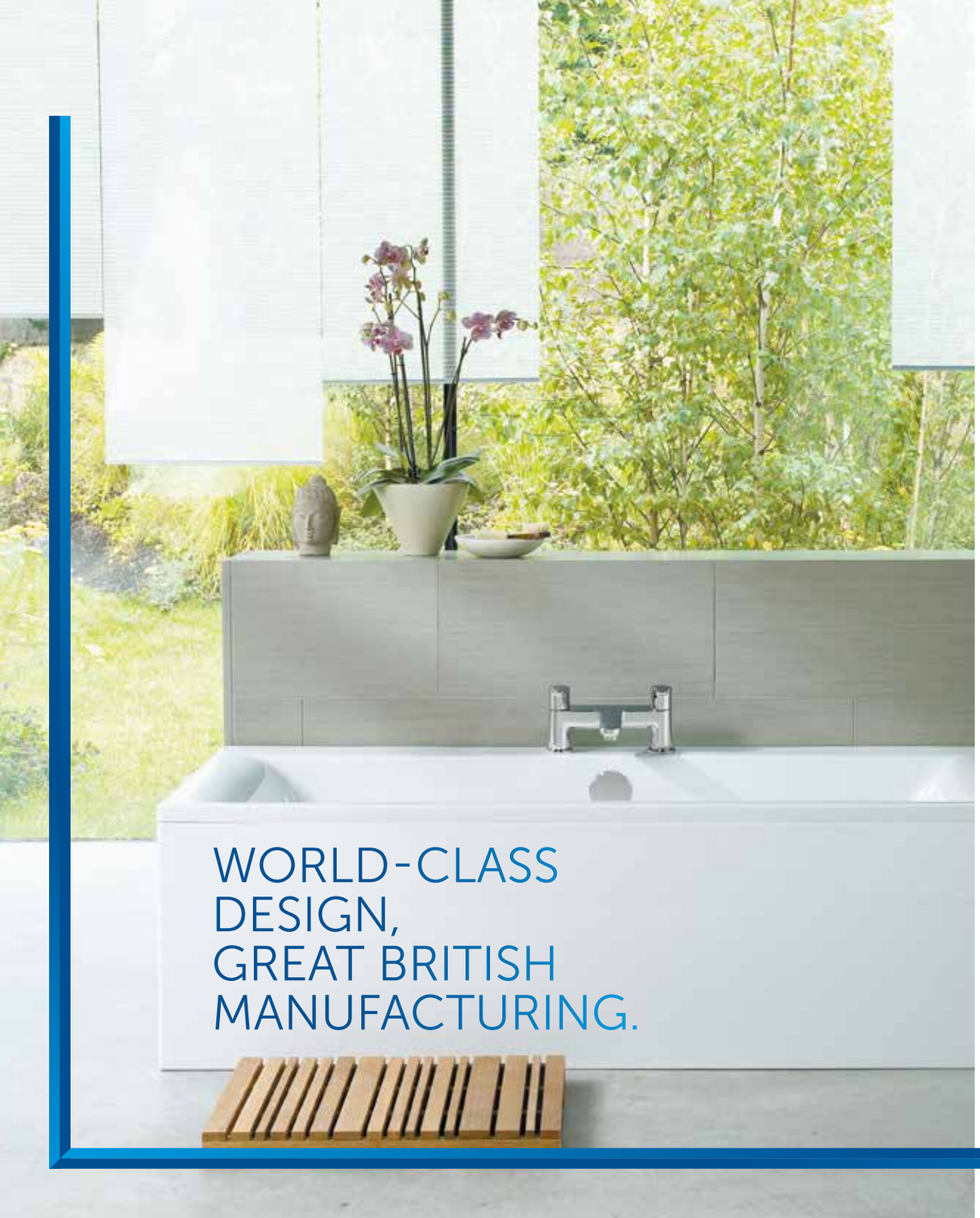

Notes